Manual for Sigfox-Ready AC Current Sensor - WSSFC-AC | FW1

THIS IS **OBSOLETE** MANUAL

Please access https://www.iot.daviteq.com/wireless-sensors for updated manual

Thank you very much for choosing Daviteq Wireless Sensors. We are the leading wireless sensor manufacturer in the World. We have a wide range of wireless sensors which support different connectivity like LoRaWAN, Sigfox, Sub-GHz, NB-IoT...Please find out more information at **this link**.

This manual is applied to the following products

Item code	HW Version	Firmware Version	Remarks
WSSFC-AC-11	1.0	1.0	

Information Changes in this version v.s previous version

Item	Changes	Changed by	Changed Date	Approved by	Approved Date
1	Initial version	D.Q.Tuan	09-04-2022	N.V.Loc	28-06-2022

To use this product, please refer step by step to the below instructions.

Operating Principle

Uplink Payload

Battery

Connect to Sigfox Network

Installation

Troubleshooting

Configuration

Calibration

Specification

Warranty and Support

1. Quick Guide

> *Reading time: 10 minutes*
> *Finish this part so you can understand and put the sensor in operation with the default configuration from the factory.*

1.1 What is the Sigfox-Ready AC Current Sensor and its principle of operation?

WSSFC-AC is a Sigfox-Ready sensor with an integrated AC current measuring transducer that can measure the AC current from a current transformer with max 5A AC current. It is compatible with any brand of current transformer (CT) on the market which gives an output max of 5A AC. The CT ratio will be selected based on the load current.

It is battery-operated and able to connect to any Sigfox network in the World. It supports all frequency zones such as RC1, RC2, RC3c, RC4, RC5, RC6, and RC7.

For the principle operation of the AC current sensor, please refer to **this link.**

1.1.1 What are the typical applications of this sensor?

Please refer to **this link** for typical applications.

1.1.2 When does the device send uplink messages?

The device will send uplink messages in the following cases:

- **Case 1:** After power-up in the 60s, the device will send the first message called START_UP. The payload will tell the user the HW version, FW version, and current configuration of the device;
- **Case 2:** Then, in every interval time (pre-configured), for example, 10 minutes, it will send the message called CYCLIC_DATA. The payload will tell the user the following data like measured value (AC current value), battery level, alarm status...

> To change the cycle of data sending, you can change the value of the parameter: CYCLIC_DATA_PERIOD (default is 600 seconds).

- **Case 3:** In case the Alarm function was enabled (in the configuration of the sensor), if the measured value passed the threshold, it will send the uplink message immediately. This message is called ALARM. The payload also tells the user the data like measured value (AC current value), battery level, alarm status...

> The alarm thresholds can be changed via downlink or offline tools.

- **Case 4:** The HEART_BEAT uplink message will be sent once a day (the default setting, can be changed in configuration) to allow the Sigfox back-end system can send the downlink message for changing the configuration of the sensor. Please refer to the downlink section for more details. The uplink payload will tell the user the HW version, FW version, and current configuration of the device;
- **Case 5:** During commissioning, testing, or calibration sensor, the user can force the device to send the uplink message so that they can get the data immediately. This message is called FORCE_DATA. The payload will provide data like raw measured value, scaled measured value, battery level, alarm status... It can be forced by applying the magnet key on the reed switch in 1s;
- **Case 6**: In case users want to change the configuration immediately, they don't need to wait up to 1 day for the HEART_BEAT message, instead they can force the device to send a special uplink message so that the device can get the new downlink message. This uplink message is named PARAMETERS_UPDATE. It can be forced by applying the magnet key in more than 5s.

1.1.3 The important configuration parameters

The sensor was pre-configured at the factory with default values for configuration parameters that meet the most use cases. However, depending on the specific use case, the customer can adjust those parameters. Please refer to **section 3.2** for more details.

1.1.4 What kind of battery is used for this sensor?

The sensor is powered by 2 x AA 1.5V batteries for many years of operation. We do recommend using Energizer L91 battery which is very popular and high performance. This battery has a capacity of up to 3500mAh with a working temperature range from -40 to +60 oC. The instruction for installing the batteries is in **this link**.

For Battery life estimation, please refer to this link.

1.2 What's in the package?

> **The package includes:**
> 01 x Main device
> 01 x AC current measuring transducer M12 and cable
> 01 x Magnet key
> 01 x Wall mounting bracket and screws

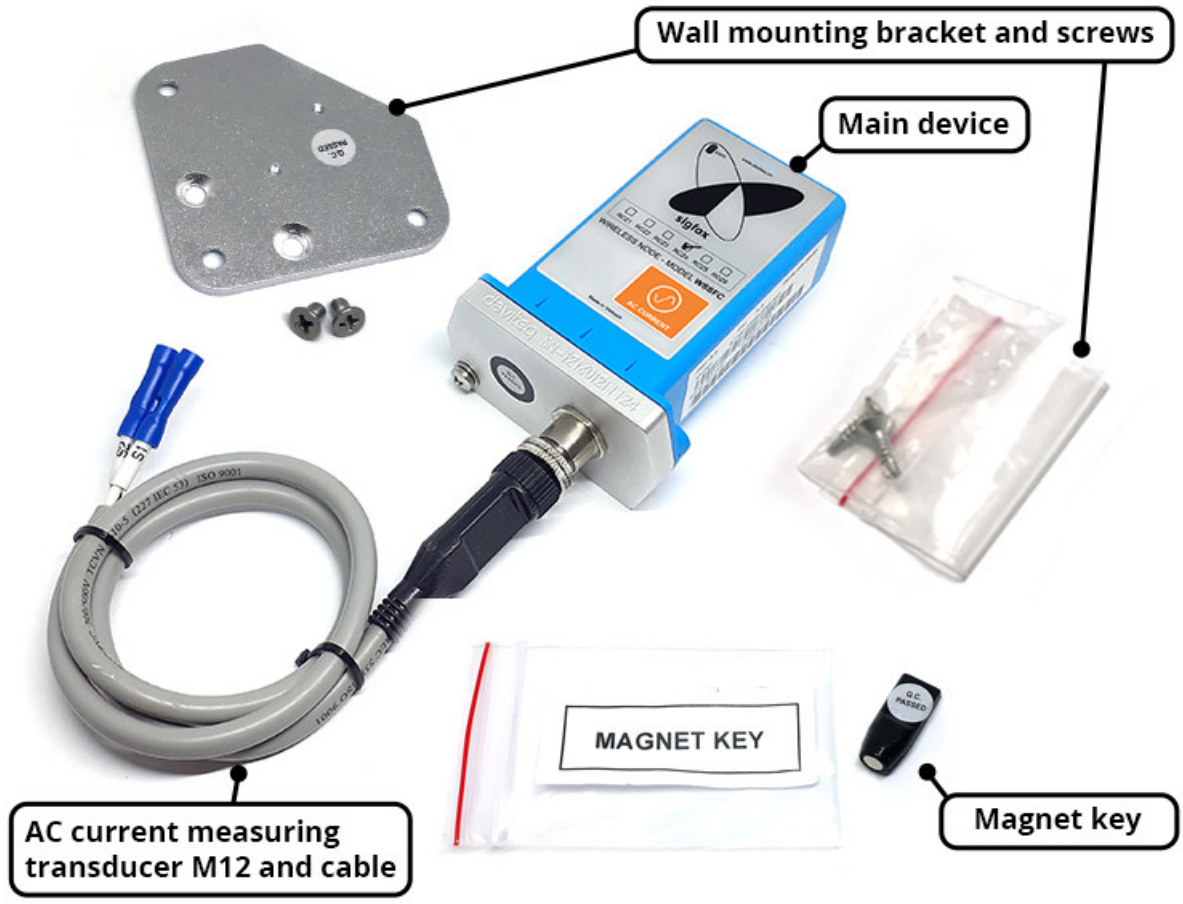

1.3 Quick Test

With the default configuration, the device can be connected quickly to the Sigfox Network by the following steps.

Step 1: Prepare the values of communication settings:

Device ID	Get **Devive ID** on the device nameplate
Device PAC	Get **Devive PAC** on the device nameplate

> **Note:** All Sigfox sensors are pre-configured with the correct RC before delivery. The settings of Device ID, Device PAC, and RC could be also read from the device memory map. Please reference section **3.2 Sensor configuration** for details.

Step 2: Add the device to Sigfox Backend

Please refer to **this link** for details

Step 3: Install the batteries to the device

Please refer to **this link** for instructions on battery installation.

> After installing the battery in 60 seconds, the first data packet will be sent to the Sigfox network. After receiving the first data packet, the time of another packet depends on the value of the parameter: **CYCLIC_DATA_PERIOD**. Additionally, you can use a Magnet Key to force the device to send data instantly.

Step 4: Decode the payload of receiving package

Please refer to section **1.4 Uplink Payload and Data Decoding** for details of decoding the receiving packet to get the measured values.

1.4 Uplink Payload and Data Decoding

For the Uplink Payload structure, please refer to **this link**.

⚠ **Note: Please select the right Payload document to suit the FW version of the sensor**

1.5 Sensor Installation

SAFETY ATTENTION:

- TO REPLACE BATTERIES OR SERVICE THE MAIN DEVICE, PLEASE PAY ATTENTION TO THE ELECTRICAL SHOCK THAT MAY HAPPEN DUE TO THE PROBLEM OF THE AC CURRENT CABLE OR FAILURE OF THE CURRENT TRANSFORMER. FOR SAFETY REASONS, REMOVE THE AC CURRENT TRANSDUCER OUT OF THE MAIN DEVICE BY UN-SCREWING THE M12 CONNECTOR BEFORE OPENING THE PLASTIC HOUSING OF THE MAIN DEVICE;

- ONLY QUALIFIED ELECTRICAL TECHNICIANS CAN HANDLE THIS DEVICE FOR INSTALLATION, MAINTENANCE, AND OPERATION;

- USE THE HEAT-SHRINK PVC TUBE TO PROTECT THE CONNECTIONS ON THE CABLE OF THE AC CURRENT AND AVOID THE WATER CONTACT WITH THOSE ELECTRICAL CONNECTIONS.

DIMENSIONS OF PRODUCT

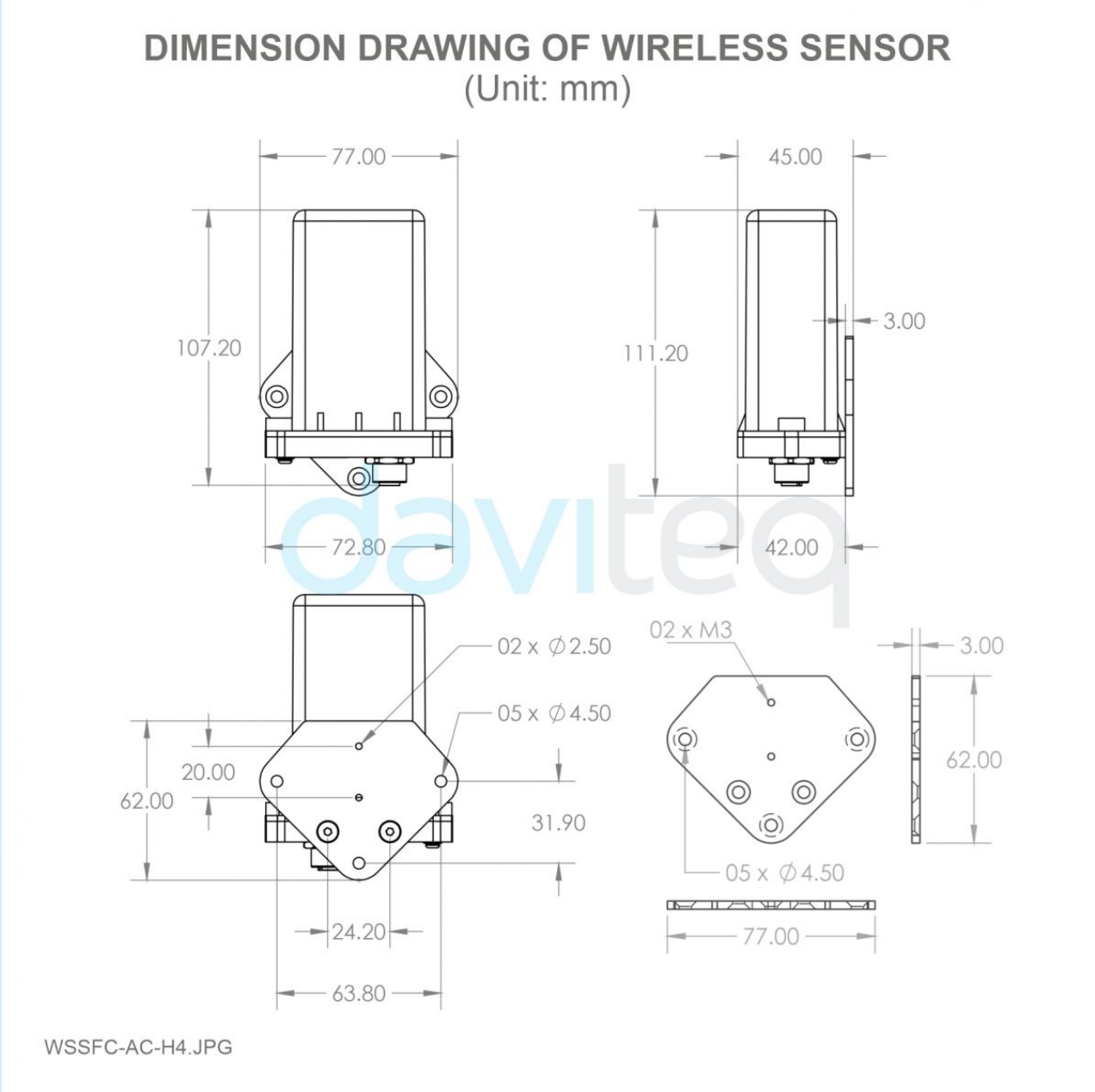

The Sigfox-Ready AC current sensor is a combination of a wireless transmitter and an AC current transducer. Therefore, the installation will be divided into 02 parts:

- Installation for the wireless transmitter: these steps are to make sure the device sends data successfully;
- Installation for AC current circuit: these steps are to make sure the device to measure correctly.

⚠ Please follow the orders of steps strictly as below.

1.5.1 Preparation of the locations

- Locate the place to mount the CT, the place that is to measure the load current;
- Locate the place to mount the Wireless transmitter to get the best RF signal. As the AC current transducer will be attached to the wireless transmitter, please make sure the cable length is enough for the distance from CT to the wireless transmitter;

> ℹ To get a strong RF signal please refer to **this link**.

1.5.2 Wireless Transmitter Installation

- Mount the wireless transmitter on the wall or outside the wall of the electrical panel. The antenna part must be higher than the highest point of the electrical panel. Then connect the grounding wire from the base of the wireless transmitter (if available) to the grounding system of the facility. Please check this link for the **mounting guide**;
- Insert the batteries into the wireless transmitter and check the system to see whether the wireless transmitter already sent the first message to the system? Please follow this link to know how to **install the batteries**.

> **ATTENTION:**
>
> **REVERSED POLARITY OF BATTERIES IN 10 SECONDS CAN DAMAGE THE SENSOR CIRCUIT!!!**

1.5.3 CT Installation

> ⚠ **Shut down the main load before installing the CT**

- For closed-type CT, please shut down the main load before installing the CT.
- For clamp-type CT, it is possible to install the CT onto the load wire, however, we highly recommend shutting down the main load for safety reasons.

> **Danger: be aware of electrical shock with AC voltage!**

1.5.4 Connect the CT with the AC current transducer

Use the crimping tool to make the connection and protect the connection with a PVC heat shrink tube as **this link**.

1.5.5 Connect the AC transducer to Wireless Transmitter

Connect the AC transducer to the wireless transmitter via the M12 connector as **this link**.

1.5.6 Device calibration

The Sigfox-Ready AC current transducer is produced with accuracy as published in the **specification** of the product and is ready to use. However, the user can re-calibrate the sensor again when necessary, please follow the steps in **this link**.

1.5.7 Turn on the Main load again

After connecting, the sensor will send the data to the system with the value = zero (no AC current). Then you can turn ON the main load again to put the system into the operation.

You can use a clamp-type ampere meter to validate the value reading from the system. Please make sure the two comparison values must be collected at the same time.

2. Maintenance

2.1 Troubleshooting

- **Problems with Sigfox communication** like not receiving the packets...please refer to **this link** to troubleshoot the device.
- **Problems with the sensor functions** like not measuring, or inaccurate measuring....please refer to **this link** to troubleshoot the sensor part.

2.2 Sensor maintenance

Maintenance works	Yes/No	Descriptions
Consumable parts replacement	No	The Sigfox-Ready AC current sensor has no consumable part, so there is no need to replace any parts.
Cleaning sensor or device	No	
Re-calibration / Re-validation	Yes	The transducer may need to be re-calibrated when necessary. Please refer to **this link** for the procedure of calibration.

3. Advanced Guide

3.1 Operating principle of the Sigfox-Ready AC current sensor

3.1.1 Operating principle of the complete device

The Daviteq Sigfox-Ready AC current sensor comprises 02 parts connected together as shown below picture.

- The Daviteq Sigfox-Ready wireless transmitter;
- The Daviteq AC 5A current Transducer;

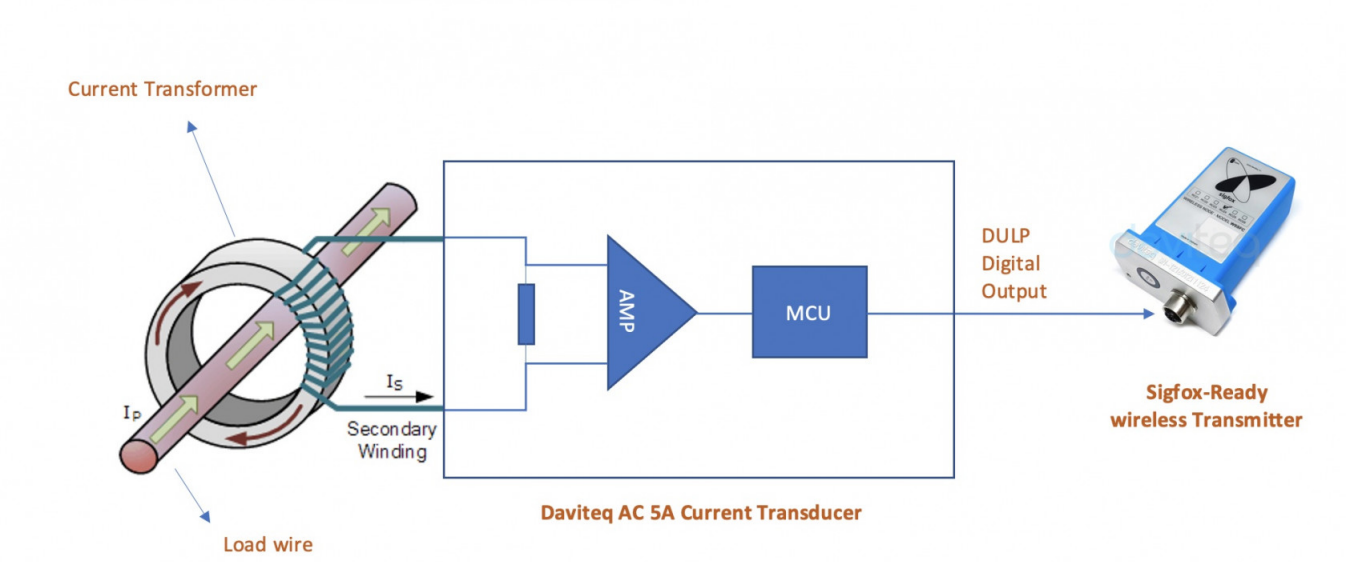

The AC current transducer is to measure the actual AC current of the secondary winding of the CT.

The Sigfox-Ready is to read the AC current value from the transducer and perform the scaling (A and B values, during calibration). The scaled current will be multiplied by the CT ratio to deliver the final value which is the actual load current that the user wants to measure.

Scaled_CT_Current = A x CT_Current + B

Actual_Load_Current = Scaled_CT_Current x CT

Where:

A : Constant A

B : Constant B

CT_current: the measured current from the transducer (Secondary winding current of the CT)

For example: the CT_current = 1.5A, the CT ratio = 20 (the CT is 100/5), A=1, B=0 ==> then the Actual_Load_Current = 1.5 x 20 = 30A

⚠ **Note:** the Low cut value of Actual_Load_Current is 0.5A. That meant the device can not measure the current load less than 0.5A

3.1.2 Operating principle of AC current transducer

To understand how the AC current transducer can measure AC current, please refer to **this link** for a complete understanding of this measuring technique.

3.1.3 Some important configuration parameters

Below are some important configuration parameters which affect the operation of the device like battery life, measurement accuracy, and alert threshold.

For Battery life estimation, please refer to this link.

- **measure_period | Default = 600s**
  This is the time period for the wireless transmitter to wake up and take the measurement from the transducer. The default value is 600s. Users can reduce this value, but smaller value, shorter battery life!
- **cyclic_data_period | Default = 600s**
  Interval time to send an uplink message regardless of any conditions
- **sensor_boot_time | Default = 1000mS**
  This value will affect the measurement accuracy. DO NOT change this value!

Those configuration parameters can be changed by downlink or offline tools. For more other configuration parameters, please refer to the next section.

3.2 Sensor Configuration

3.2.1 How to configure the Sigfox-Ready AC Current Sensor?

Sensor configuration can be configured in 02 methods:

- **Method 1:** Configuring via Downlink message. Please find the instructions in **this link**, but please take note of the FW version of the Document.
- **Method 2:** Configuring via **offline cable**.

Note: THE SENSOR IS ONLY ACTIVE FOR OFFLINE CONFIGURATION IN THE FIRST 60 SINCE POWER UP BY BATTERY OR PLUGGING THE CONFIGURATION CABLE.

3.2.2 What parameters of the device are configured?

- Some parameters are read-only, and some are read and writeable.
- To read the parameters, use the off-line cable as above instruction.
- Via uplink message, users can read only one parameter, which is the CURRENT_CONFIGURATION.

Below tables are the lists of the parameters of the device.

Read-only Parameter Table

Modbus Register (Decimal)	Modbus Register (Hex)	Function Code (Read)	No. of Registers	Description	Range	Format	Property	Comment
2	2	3	4	FW_VERSION		string	Read	
6	6	3	2	HW_VERSION		string	Read	
8	8	3	2	DEVICE_ID		hex	Read	Product ID
10	A	3	4	DEVICE_PAC		hex	Read	Product PAC
14	E	3	1	SENSOR_TYPE	1-255	uint16	Read	Sensor or Input Type

Read/Write Parameter Table

Modbus Register (Decimal)	Modbus Register (Hex)	Function Code (Read)	Function Code (Write)	No. of Registers	Description	Range	Default	Format	Property	Comment
270	10E	3	16	4	CURRENT_C			hex	Read/Write	Check the **Payload Do** section: 5.*Payload for downlink message* for more information
274	112	3	16	1	SERVER_CO			uint16	Read/Write	0: Send to Sigfox Network 1: Send to Dongle
276	114	3	16	1	RADIO_CONI	1-4	4	uint16	Read/Write	RC zones selection 1, 2 , 3, 4 is RC1, RC2, RC3s, RC4
277	115	3	16	1	TX_POWER		20	int16	Read/Write	RF Tx power
278	116	3	16	2	CONSTANT_		1	float	Read/Write	Constant a for scaling measured value
280	118	3	16	2	CONSTANT_		0	float	Read/Write	Constant b for scaling measured value
282	11A	3	16	2	HIGH_CUT		1E+09	float	Read/Write	High cut value for the calculated value
284	11C	3	16	2	LOW_CUT		0,5	float	Read/Write	Low cut value for the calculated value
286	11E	3	16	2	SENSOR_BO		1000	uint32	Read/Write	Boot time of sensor/input in ms

306	132	3	16	2	CT		40	float	Read/Write	CT of current transformer

3.3 Calibration for Sigfox-Ready AC current transducer

Please refer to **this link**.

4. Product specification

Please refer to the detailed specifications in **this link**.

5. Warranty and Support

For warranty terms and support procedures, please refer to **this link**.

6. References

Use-cases:

Case studies:

White-papers:

END.

Revision #63
Created Fri, Jun 24, 2022 2:11 AM by Lộc Vĩnh Nguyễn
Updated Wed, Feb 28, 2024 9:03 AM