Manual for Sigfox-Ready Air/Gas Flow Sensor - WSSFC-M12F-AFD | FW1

THIS IS **OBSOLETE** MANUAL

Please access https://www.iot.daviteq.com/wireless-sensors for updated manual

Thank you very much for choosing Daviteq Wireless Sensors. We are the leading wireless sensor manufacturer in the World. We have a wide range of wireless sensors which support different connectivity like LoRaWAN, Sigfox, Sub-GHz, NB-IoT...Please find out more information at **this link**.

This manual is applied to the following products

Item code	HW Version	Firmware Version	Remarks
WSSFC-M12F-AFD		1	

Product Features

Connectivity Type	Sigfox
Product Type	2 parts
Mounting Type	Direct process mounting for the whole set
Powered by	2 x AA batteries 1.5V

Information Changes in this version v.s previous version

Item	Changes	Changed by	Changed Date	Approved by	Approved Date
1	Initial version	D.Q.Tuan	26-08-2022	N.V.Loc	05-09-2022

To use this product, please refer step by step to the below instructions.

Operating Principle

Uplink Payload

Battery

Connect to Sigfox Network

Installation

Troubleshooting

Configuration

Calibration

Specification

Warranty and Support

1. Quick Guide

> *Reading time: 10 minutes*
> *Finish this part so you can understand and put the sensor in operation with the default configuration from the factory.*

1.1 What is the Sigfox-Ready AFD Air/Gas Flow Sensor and its principle of operation?

WSSFC-M12F-AFD is a Sigfox-Ready node to work with an AFD probe for measuring the Air/Gas Flow in a pipe or duct.

It is battery-operated and able to connect to any Sigfox network in the World. It supports all frequency zones such as RC1, RC2, RC3c, RC4, RC5, RC6, and RC7.

For the principle operation of the AFD probe, please refer to **this link.**

1.1.1 What are the typical applications of this sensor?

Please refer to **this link** for typical applications.

1.1.2 When does the device send uplink messages?

The device will send uplink messages in the following cases:

- **Case 1:** After power-up in the 60s, the device will send the first message called START_UP. The payload will tell the user the HW version, FW version, and current configuration of the device;
- **Case 2:** Then, in every interval time (pre-configured), for example, 10 minutes, it will send the message called CYCLIC_DATA. The payload will tell the user the following data like measured value (AC current value), battery level, alarm status...

> To change the cycle of data sending, you can change the value of the parameter: CYCLIC_DATA_PERIOD (default is 600 seconds).

- **Case 3:** If the Alarm function was enabled (in the configuration of the sensor), if the measured value passed the threshold, it will send the uplink message immediately. This message is called ALARM. The payload also tells the user the data like measured value (AC current value), battery level, alarm status...

> The alarm thresholds can be changed via downlink or offline tools.

- **Case 4:** The HEART_BEAT uplink message will be sent once a day (the default setting can be changed in configuration) to allow the Sigfox back-end system can send the downlink message for changing the configuration of the sensor. Please refer to the downlink section for more details. The uplink payload will tell the user the HW version, FW version, and current configuration of the device;
- **Case 5:** During commissioning, testing, or calibration sensor, the user can force the device to send the uplink message to get the data immediately. This message is called FORCE_DATA. The payload will provide data like raw measured value, scaled measured value, battery level, alarm status... It can be forced by applying the magnet key on the reed switch in 1s;
- **Case 6**: If users want to change the configuration immediately, they don't need to wait up to 1 day for the HEART_BEAT message, instead they can force the device to send a special uplink message so that the device can get the new downlink message. This uplink message is named PARAMETERS_UPDATE. It can be forced by applying the magnet key in more than 5s.

1.1.3 The important configuration parameters

The sensor was pre-configured at the factory with default values for configuration parameters that meet most use cases. However, depending on the specific use case, the customer can adjust those parameters. Please refer to **section 3.2** for more details.

1.1.4 What kind of battery is used for this sensor?

The sensor is powered by 2 x AA 1.5V batteries for many years of operation. We do recommend using Energizer L91 battery which is very popular and high performance. This battery has a capacity of up to 3500mAh with a working temperature range from -40 to +60 oC. The instruction for installing the batteries is in **this link**.



Figure 1. Battery Energizer L91

For Battery life estimation, please refer to this link.

1.2 What's in the package?

> **The package includes:**
> 01 x Main device
> 01 x Magnet key
> 01 x Wall mounting bracket and screws
> 01 x AFD flow sensor probe (order separately with item code AFD-....)



Figure 2. Product package of WSSFC-M12F-AFD

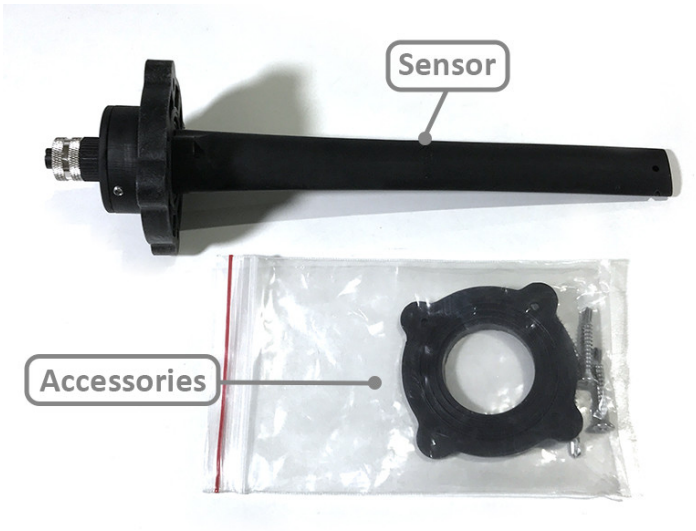

Figure 3. Product package of AFD-....

1.3 Quick Test

With the default configuration, the device can be connected quickly to the Sigfox Network by the following steps.

Step 1: Prepare the values of communication settings:

Device ID	Get **Devive ID** on the device nameplate
Device PAC	Get **Devive PAC** on the device nameplate

> **Note:** All Sigfox sensors are pre-configured with the correct RC before delivery. The settings of Device ID, Device PAC, and RC could also be read from the device memory map. Please reference section **3.2 Sensor configuration** for details.

Step 2: Add the device to Sigfox Backend

Please refer to **this link** for details

Step 3: Install the batteries to the device

Please refer to **this link** for instructions on battery installation.

After installing the battery in 60 seconds, the first data packet will be sent to the Sigfox network. After receiving the first data packet, the time of another packet depends on the value of the parameter: **CYCLIC_DATA_PERIOD**. Additionally, you can use a Magnet Key to force the device to send data instantly.

Step 4: Decode the payload of receiving package

Please refer to section **1.4 Uplink Payload and Data Decoding** for details of decoding the receiving packet to get the measured values.

1.4 Uplink Payload and Data Decoding

For the Uplink Payload structure, please refer to **this link**.

Note: Please select the right Payload document to suit the FW version of the sensor

1.5 Sensor Installation

DIMENSIONS OF PRODUCT

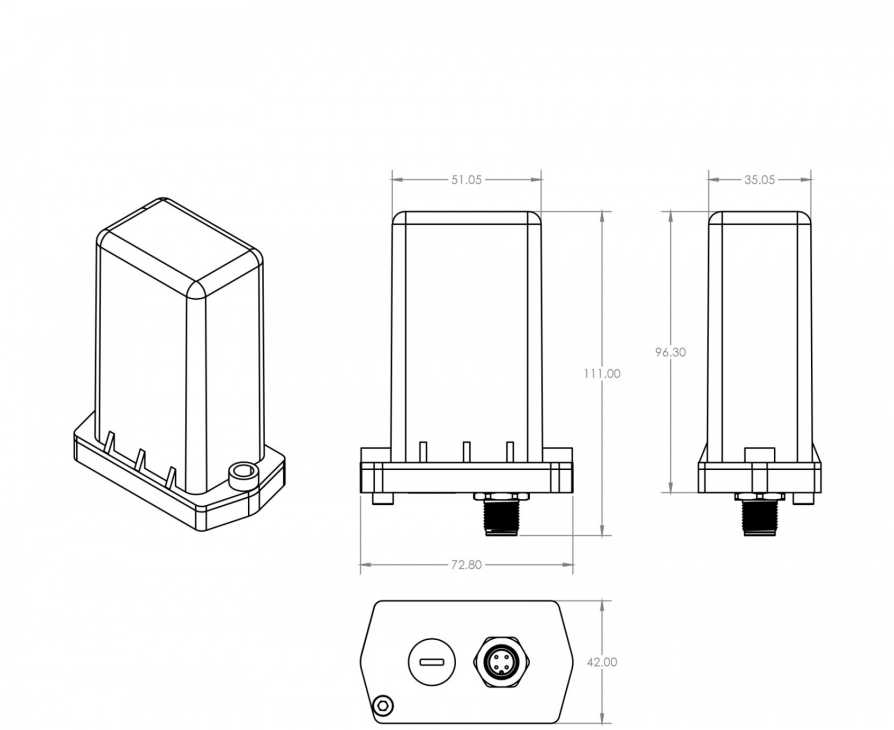

Figure 4. Dimensions of WSSFC-M12F-AFD

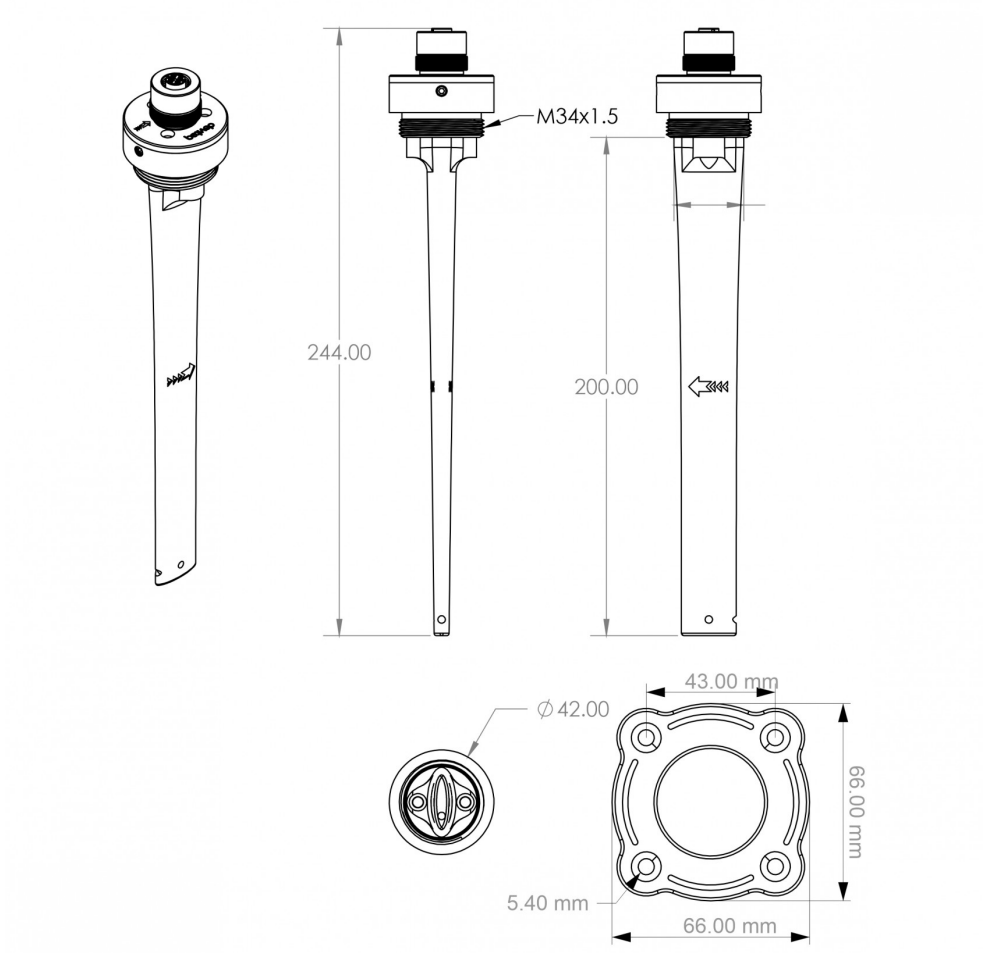

Figure 5. Dimensions of AFD-0200

1.5.1 Installation

The Sigfox-Ready AFD Air/Gas flow sensor combines a wireless transmitter WSSFC-M12F-AFD and an AFD Air/Gas Flow Sensor. Therefore, the installation will be divided into 02 parts:

+ Installation for AFD Air/Gas Flow Sensor: these steps are to make sure the device to measure correctly. Please follow **this link**.

+ Installation for the wireless transmitter: these steps ensure the device sends data successfully. Please see below the steps

- Insert the batteries into the wireless transmitter and check the system to see whether the wireless transmitter already sent the first message to the system. Please follow this link to learn how to **install the batteries**.

  ATTENTION:

  REVERSED POLARITY OF BATTERIES IN 10 SECONDS CAN DAMAGE THE SENSOR CIRCUIT!!!

- Attach the wireless transmitter to the AFD probe as below figures.



Figure 6. Complete set of WSSFC-M12F-AFD and AFD-0200

1.5.2 Device calibration & configuration

Please refer to **this link**.

2. Maintenance

2.1 Troubleshooting

- **Problems with Sigfox communication** like not receiving the packets...please refer to**this link** to troubleshoot the device.
- **Problems with the sensor functions** like not measuring or inaccurate measuring....please refer to**this link** to troubleshoot the sensor part.

2.2 Device maintenance

2.2.1 Maintenance for Wireless transmitter WSSFC-M12F-AFD

Maintenance works	Yes/No	Descriptions
Consumable parts replacement	Yes	The battery is the only part need to check the lifetime to replace. Check the battery status on the back-end system.
Cleaning device	No	
Re-calibration / Re-validation	No	No calibration is required for the wireless transmitter.

2.2.2 Maintenance for AFD flow probe

Please refer to **this link**.

3. Advanced Guide

3.1 Operating principle of the Sigfox-Ready AFD Air/Gas Flow Sensor

3.1.1 Operating principle of the complete device

The Daviteq Sigfox-Ready AFD Air/Gas Flow sensor comprises 02 parts connected together as shown below picture.

- The Daviteq Sigfox-Ready wireless transmitter WSSFC-M12F-AFD
- The Daviteq AFD Air/Gas Flow Sensor AFD-...



Figure 7. Complete set of WSSFC-M12F-AFD and AFD-0200

The AFD Air/Gas Flow Sensor measures pressure and temperature... in the duct or pipe.

The Sigfox-Ready wireless transmitter is to read the parameters of the probe like differential pressure, temperature, and error code... and performs the scaling and calculation to deliver the fluid velocity in the duct or pipe.

3.1.2 Operating principle of AFD Air/Gas Flow Sensor

To understand how the AFD Air/Gas Flow Sensor works, please refer to**this link** for a complete understanding of this measuring technique.

3.1.3 Some important configuration parameters

Below are some important configuration parameters which affect the operation of the device like battery life, measurement accuracy, and alert threshold.

For Battery life estimation, please refer to this link.

- **measure_period | Default = 600s**
  This is the time period for the wireless transmitter to wake up and take the measurement from the transducer. The default value is 600s. Users can reduce this value, but smaller value, shorter battery life!
- **cyclic_data_period | Default = 1800s**
  Interval time to send an uplink message regardless of any conditions
- **sensor_boot_time | Default = 200mS**
  This value will affect the measurement accuracy. DO NOT change this value!
- **density_of_fluid | Default = 1.225 (Air)**
  This value will affect the measurement accuracy.

Those configuration parameters can be changed by downlink or offline tools. For more other configuration parameters, please refer to the next section.

3.2 Sensor Configuration

3.2.1 How to configure the Sigfox-Ready AFD Air/Gas Flow Sensor?

Sensor configuration can be configured in 02 methods:

- **Method 1:** Configuring via Downlink message. Please find the instructions in**this link**, but please take note of the FW version of the Document.
- **Method 2:** Configuring via **offline cable**.

Note: THE SENSOR IS ONLY ACTIVE FOR OFFLINE CONFIGURATION IN THE FIRST 60 SINCE POWER UP BY BATTERY OR PLUGGING THE CONFIGURATION CABLE.

3.2.2 What parameters of the device are configured?

- Some parameters are read-only, and some are read and writeable.
- To read the parameters, use the off-line cable as above instruction.
- Via uplink message, users can read only one parameter, which is the CURRENT_CONFIGURATION.

Below tables are the lists of the parameters of the device.

Read-only Parameter Table

Modbus Register (Decimal)	Modbus Register (Hex)	Function Code (Read)	No. of Registers	Description	Range	Format	Property	Comment
2	2	3	4	FW_VERSION		string	Read	
6	6	3	2	HW_VERSION		string	Read	
8	8	3	2	DEVICE_ID		hex	Read	Product ID
10	A	3	4	DEVICE_PAC		hex	Read	Product PAC
14	E	3	1	SENSOR_TYPE	1-255	uint16	Read	Sensor or Input Type

Read/Write Parameter Table

Modbus Register (Decimal)	Modbus Register (Hex)	Function Code (Read)	Function Code (Write)	No. of Registers	Description	Range	Default	Format	Property	Comment
270	10E	3	16	4	CURRENT_C			hex	Read/Write	Check the **Payload Do** section: 5.*Payload for downlink message* for more information
274	112	3	16	1	SERVER_CO		0	uint16	Read/Write	0: Send to Sigfox Network 1: Send to Dongle
276	114	3	16	1	RADIO_CON	1-4	4	uint16	Read/Write	RC zones selection 1, 2 , 3, 4 is RC1, RC2, RC3s, RC4
277	115	3	16	1	TX_POWER		20	int16	Read/Write	RF Tx power
278	116	3	16	2	CONSTANT_		1	float	Read/Write	Constant a for scaling measured value
280	118	3	16	2	CONSTANT_		0	float	Read/Write	Constant b for scaling measured value

282	11A	3	16	2	HIGH_CUT		1E+09	float	Read/Write	High cut value for the calculated value
284	11C	3	16	2	LOW_CUT		0	float	Read/Write	Low cut value for the calculated value
286	11E	3	16	2	SENSOR_BO		200	uint32	Read/Write	Boot time of sensor/input in ms
307	133	3	16	1	TEMPERATU		0	int16	Read/Write	Offset adjustment for measured temperature value
308	134	3	16	2	DENSITY_OF		1.225	float	Read/Write	Fluid Density, default is Air

3.3 Calibration for Sigfox-Ready AFD Air/Gas Flow Sensor

Please refer to **this link**.

4. Product specification

Please refer to the detailed specifications in **this link**.

5. Warranty and Support

For warranty terms and support procedures, please refer to **this link**.

6. References

Use-cases:

Case studies:

White-papers:

END.

Revision #19
★ Created Mon, Sep 5, 2022 8:19 PM by Lộc Vĩnh Nguyễn
Updated Wed, Feb 28, 2024 9:04 AM