Manual for Sigfox-Ready Single-Axis Vibration Sensor - WSSFC-V1A | FW2

THIS IS **OBSOLETE** MANUAL

Please access https://www.iot.daviteq.com/wireless-sensors for updated manual

Thank you very much for choosing Daviteq Wireless Sensors. We are the leading wireless sensor manufacturer in the World. We have a wide range of wireless sensors which support different connectivity like LoRaWAN, Sigfox, Sub-GHz, NB-IoT...Please find out more information at **this link**.

This manual is applied to the following products

Item code	HW Version	Firmware Version	Remarks
WSSFC-V1A-025		2	

Product Features

Connectivity Type	Sigfox
Product Type	2 parts
Mounting Type	Direct process mounting for sensor, wall mount for transmitter
Powered by	2 x AA batteries 1.5V

Information Changes in this version v.s previous version

Item	Changes	Changed by	Changed Date	Approved by	Approved Date
1	Initial version	D.Q.Tuan	29-08-2022	N.V.Loc	05-09-2022

To use this product, please refer step by step to the below instructions.

Operating Principle

Uplink Payload

Battery

Connect to Sigfox Network

Installation

Troubleshooting

Configuration

Calibration

Specification

Warranty and Support

1. Quick Guide

> *Reading time: 10 minutes*
> *Finish this part so you can understand and put the sensor in operation with the default configuration from the factory.*

1.1 What is the Sigfox-Ready V1A Single-Axis Vibration Sensor and its principle of operation?

WSSFC-V1A is a cost-effective, single-axis vibration sensor designed for condition monitoring and preventive

maintenance applications. The piezo-electric accelerometer is available in ranges ±25g or 50g and features a flat frequency response up to >10kHz. Its accelerometer feature a stable piezo-ceramic crystal in shear mode with low-power electronics, sealed in a fully hermetic package. The Piezo Electric technology incorporated in the WSSCF-V1A accelerometer has a proven track record for offering the reliable and long-term stable output required for condition monitoring applications. The accelerometer is designed and qualified for machine health monitoring and has superior Resolution, Dynamic Range, and Bandwidth to MEMS devices. Besides that, it can also measure the temperature at the mounting point.

It is battery-operated and able to connect to any Sigfox network in the World. It supports all frequency zones such as RC1, RC2, RC3c, RC4, RC5, RC6, and RC7.

For the principle operation of the V1A single-axis vibration sensor, please refer to **this link.**

1.1.1 What are the typical applications of this sensor?

Please refer to **this link** for typical applications.

1.1.2 When does the device send uplink messages?

The device will send uplink messages in the following cases:

- **Case 1:** After power-up in the 60s, the device will send the first message called START_UP. The payload will tell the user the HW version, FW version, and current configuration of the device;
- **Case 2:** Then, in every interval time (pre-configured), for example, 10 minutes, it will send the message called CYCLIC_DATA. The payload will tell the user the following data like measured values, battery level, alarm status...

> To change the cycle of data sending, you can change the value of the parameter: CYCLIC_DATA_PERIOD (default is 600 seconds).

- **Case 3:** If the Alarm function was enabled (in the configuration of the sensor), if the measured value passed the threshold, it will send the uplink message immediately. This message is called ALARM. The payload also tells the user the data like measured values, battery level, alarm status...

> The alarm thresholds can be changed via downlink or offline tools.

- **Case 4:** The HEART_BEAT uplink message will be sent once a day (the default setting can be changed in configuration) to allow the Sigfox back-end system can send the downlink message for changing the configuration of the sensor. Please refer to the downlink section for more details. The uplink payload will tell the user the HW version, FW version, and current configuration of the device;
- **Case 5:** During commissioning, testing, or calibration sensor, the user can force the device to send the uplink message to get the data immediately. This message is called FORCE_DATA. The payload will provide data like raw measured value, scaled measured value, battery level, alarm status... It can be forced by applying the magnet key on the reed switch in 1s;
- **Case 6**: If users want to change the configuration immediately, they don't need to wait up to 1 day for the HEART_BEAT message, instead they can force the device to send a special uplink message so that the device can get the new downlink message. This uplink message is named PARAMETERS_UPDATE. It can be forced by applying the magnet key in more than 5s.

1.1.3 The important configuration parameters

The sensor was pre-configured at the factory with default values for configuration parameters that meet most use cases. However, depending on the specific use case, the customer can adjust those parameters. Please refer to **section 3.2** for more details.

1.1.4 What kind of battery is used for this sensor?

The sensor is powered by 2 x AA 1.5V batteries for many years of operation. We do recommend using Energizer L91 battery which is very popular and high performance. This battery has a capacity of up to 3500mAh with a working temperature range from -40 to +60 oC. The instruction for installing the batteries is in **this link**.

Figure 1. Battery Energizer L91

For Battery life estimation, please refer to this link.

1.2 What's in the package?

> **The package includes:**
> 01 x Main device with 2m M12 cable
> 01 x Magnet key

01 x Wall mounting bracket and screws
01 x Vibration sensor module V1A



Figure 2. Product package of WSSFC-V1A-025

1.3 Quick Test

With the default configuration, the device can be connected quickly to the Sigfox Network by the following steps.

Step 1: Prepare the values of communication settings:

Device ID	Get **Devive ID** on the device nameplate
Device PAC	Get **Devive PAC** on the device nameplate

Note: All Sigfox sensors are pre-configured with the correct RC before delivery. The settings of Device ID, Device PAC, and RC could also be read from the device memory map. Please reference section **3.2 Sensor configuration** for details.

Step 2: Add the device to Sigfox Backend

Please refer to **this link** for details

Step 3: Install the batteries to the device

Please refer to **this link** for instructions on battery installation.

After installing the battery in 60 seconds, the first data packet will be sent to the Sigfox network. After receiving the first data packet, the time of another packet depends on the value of the parameter: **CYCLIC_DATA_PERIOD**. Additionally, you can use a Magnet Key to force the device to send data instantly.

Step 4: Decode the payload of receiving package

Please refer to section **1.4 Uplink Payload and Data Decoding** for details of decoding the receiving packet to get the measured values.

1.4 Uplink Payload and Data Decoding

For the Uplink Payload structure, please refer to **this link**.

Note: Please select the right Payload document to suit the FW version of the sensor

1.5 Sensor Installation

1.5.1 Dimension drawings

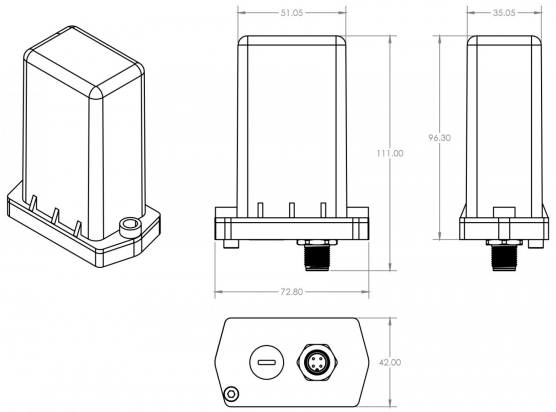

Figure 3. Dimensions of Sigfox Transmitter

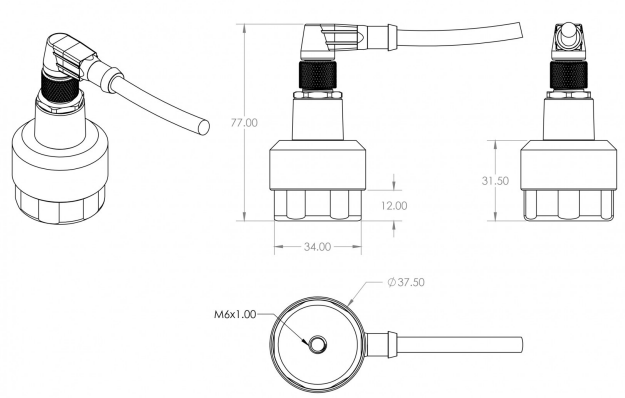

Figure 4. Dimensions of V1A vibration sensor module

1.5.2 Installation

The Sigfox-Ready V1A vibration sensor combines a wireless transmitter WSSFC and a V1A vibration sensor. Therefore, the installation will be divided into 02 parts:

INSTALLATION GUIDE FOR V1A SENSOR MODULE	INSTALLATION GUIDE FOR WIRELESS TRANSMITTER. PLEASE SEE THE BELOW STEPS.

- Mount the wireless transmitter on the wall or a pole nearby the object to monitor the vibration. The wireless transmitter must be mounted at the minimum level of 2m from the ground for a better RF signal. To get the strongest RF signal, please follow **this link**.
- How to mount it with a mounting bracket? please check**this guide**.
- Insert the batteries into the wireless transmitter and check the system to see whether the wireless transmitter already sent the first message to the system. Please follow this link to learn how to **install the batteries**.

> **ATTENTION:**
>
> **REVERSED POLARITY OF BATTERIES IN 10 SECONDS CAN DAMAGE THE SENSOR CIRCUIT!!!**

- Connect the M12 cable to the V1A sensor module as below figure.

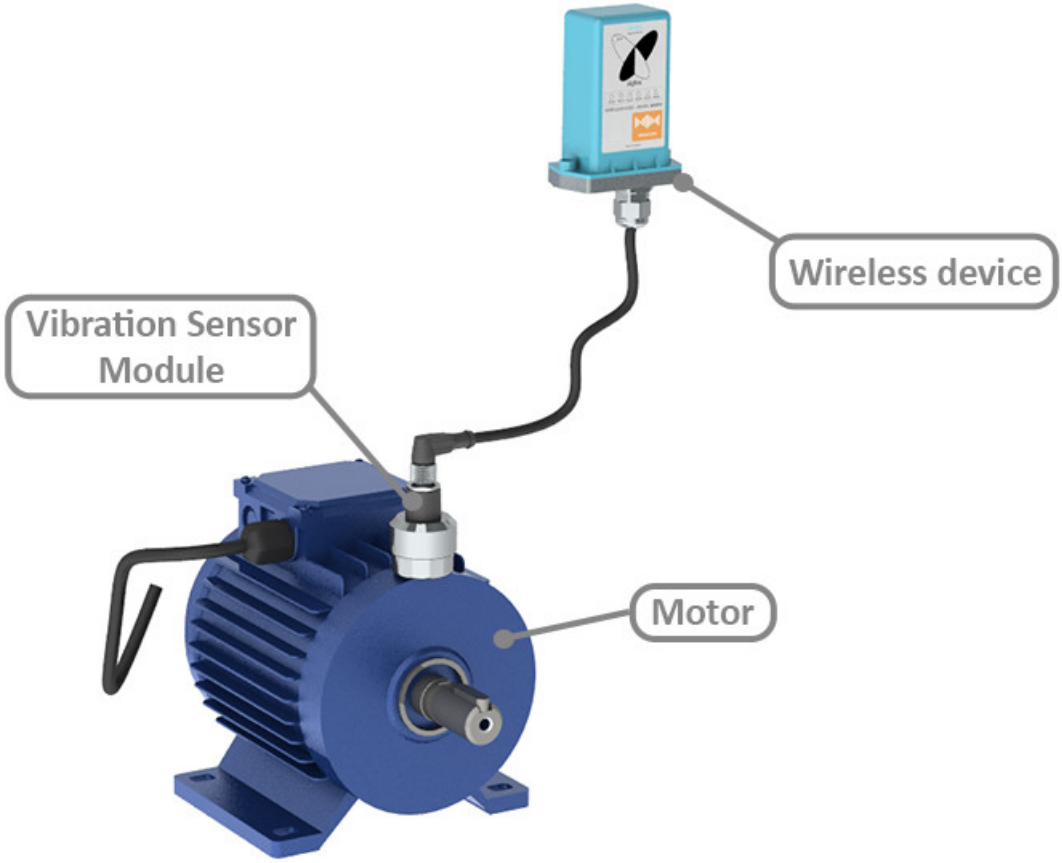

Figure 5. Complete set of WSSFC-V1A-025 vibration sensor

1.5.3 Device calibration & configuration

Please refer to **this link**.

2. Maintenance

2.1 Troubleshooting

- **Problems with Sigfox communication** like not receiving the packets...please refer to**this link** to troubleshoot the device.
- **Problems with the sensor functions** like not measuring or inaccurate measuring....please refer to**this link** to troubleshoot the sensor part.

2.2 Device maintenance

2.2.1 Maintenance for Wireless transmitter

Maintenance works	Yes/No	Descriptions
Consumable parts replacement	Yes	The battery is the only part need to check the lifetime to replace. Check the battery status on the back-end system.
Cleaning device	No	
Re-calibration / Re-validation	No	No calibration is required for the wireless transmitter.

2.2.2 Maintenance for V1A sensor module

Please refer to **this link**.

3. Advanced Guide

3.1 Operating principle of the Sigfox-Ready V1A Single-axis Vibration Sensor

3.1.1 Operating principle of the complete device

The Daviteq Sigfox-Ready V1A Single-axis Vibration Sensor comprises 02 parts connected together as shown below picture.

- The Daviteq Sigfox-Ready wireless transmitter
- The Daviteq V1A vibration sensor module

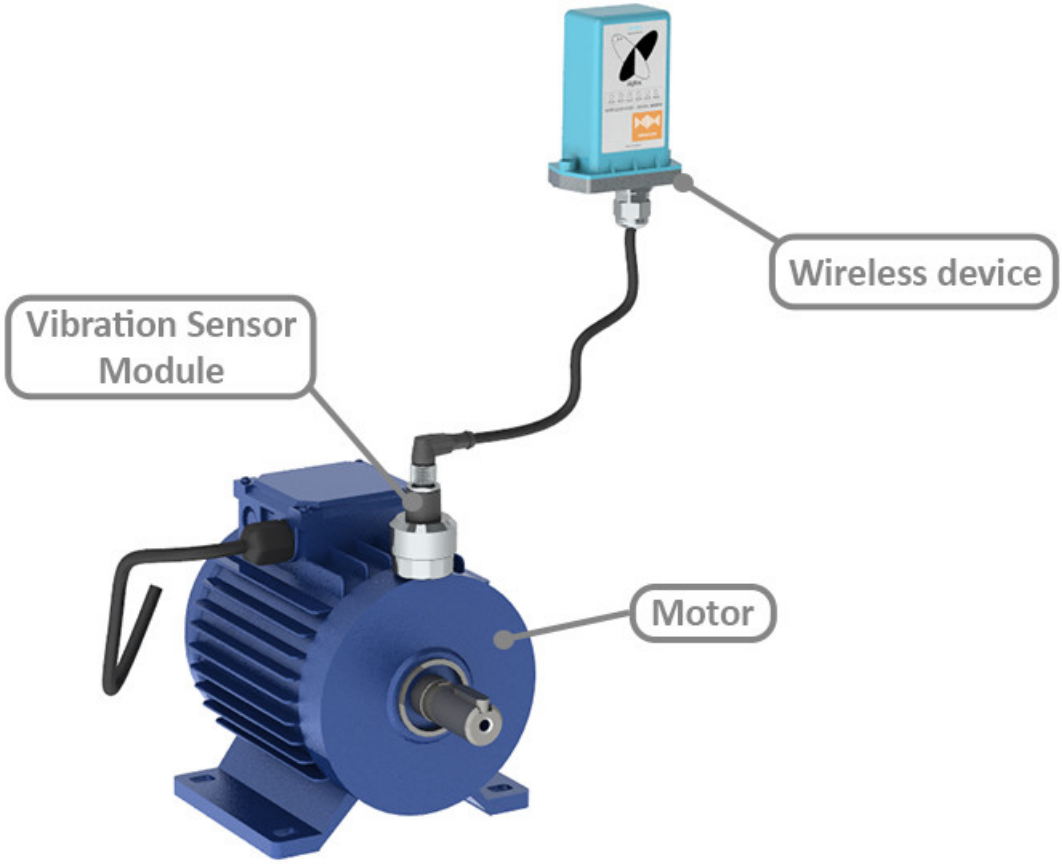

Figure 6. Complete set of WSSFC-V1A-025 vibration sensor mounted on the motor

The V1A single-axis vibration sensor measures the vibration of the object.

The Sigfox-Ready wireless transmitter is to read the measurement values from the V1A sensor and performs the scaling and calculation to deliver accurate outputs.

3.1.2 Operating principle of V1A single-axis vibration sensor

To understand how the V1A single-axis vibration sensor works, please refer to**this link** for a complete understanding of this measuring technique.

3.1.3 Some important configuration parameters

Below are some important configuration parameters which affect the operation of the device like battery life, measurement accuracy, and alert threshold.

For Battery life estimation, please refer to this link.

- **measure_period | Default = 3600s**
  This is the time period for the wireless transmitter to wake up and take the measurement from the transducer. The default value is 3600s. Users can reduce this value, but smaller value, shorter battery life!

- **cyclic_data_period | Default = 3600s**

Interval time to send an uplink message regardless of any conditions

- **constant_A | Default = calibrated value by factory**
  This value will affect the measurement accuracy. DO NOT change this value!

Those configuration parameters can be changed by downlink or offline tools. For more other configuration parameters, please refer to the next section.

3.2 Sensor Configuration

3.2.1 How to configure the Sigfox-Ready V1A Sing-axis Vibration Sensor?

Sensor configuration can be configured in 02 methods:

- **Method 1:** Configuring via Downlink message. Please find the instructions in**this link**, but please take note of the FW version of the Document.
- **Method 2:** Configuring via **offline cable**.

Note: THE SENSOR IS ONLY ACTIVE FOR OFFLINE CONFIGURATION IN THE FIRST 60 SINCE POWER UP BY BATTERY OR PLUGGING THE CONFIGURATION CABLE.

3.2.2 What parameters of the device are configured?

- Some parameters are read-only, and some are read and writeable.
- To read the parameters, use the off-line cable as above instruction.
- Via uplink message, users can read only one parameter, which is the CURRENT_CONFIGURATION.

Below tables are the lists of the parameters of the device.

Read-only Parameter Table

Modbus Register (Decimal)	Modbus Register (Hex)	Function Code (Read)	No. of Registers	Description	Range	Format	Property	Comment
2	2	3	4	FW_VERSION		string	Read	
6	6	3	2	HW_VERSION		string	Read	
8	8	3	2	DEVICE_ID		hex	Read	Product ID
10	A	3	4	DEVICE_PAC		hex	Read	Product PAC
14	E	3	1	SENSOR_TYPE	1-255	uint16	Read	Sensor or Input Type

Read/Write Parameter Table

Modbus Register (Decimal)	Modbus Register (Hex)	Function Code (Read)	Function Code (Write)	No. of Registers	Description	Range	Default	Format	Property	Comment
270	10E	3	16	4	CURRENT_C			hex	Read/Write	Check the **Payload Do** section: 5.*Payload for downlink message* for more information
274	112	3	16	1	SERVER_CO		0	uint16	Read/Write	0: Send to Sigfox Network 1: Send to Dongle

276	114	3	16	1	RADIO_CONI	1-4	4	uint16	Read/Write	RC zones selection 1, 2 , 3, 4 is RC1, RC2, RC3s, RC4
277	115	3	16	1	TX_POWER		20	int16	Read/Write	RF Tx power
278	116	3	16	2	CONSTANT_		1	float	Read/Write	Constant a for scaling measured value
306	132	3	16	1	ENB_DATGR		1	uint16	Read/Write	bit0: enable datagram 0 bit1: enable datagram 1 bit2: enable datagram 2
307	133	3	16	1	TEMPERATU		0	int16	Read/Write	Offset adjustment for measured temperature value

3.3 Calibration for Sigfox-Ready V1A Vibration Sensor

Please refer to **this link**.

4. Product specification

Please refer to the detailed specifications in **this link**.

5. Warranty and Support

For warranty terms and support procedures, please refer to **this link**.

6. References

Use-cases:

Case studies:

White-papers:

END.

Revision #11
★ Created Wed, Sep 7, 2022 2:48 AM by Lộc Vĩnh Nguyễn
Updated Wed, Feb 28, 2024 9:04 AM