USER GUIDE FOR SMART VORTEX FLOW METER SVF128

SVF128-MN-EN-01	MAY-2021

This document is applied for the following products

SKU	SVF128

1. Functions Change Log

HW Ver.	FW Ver.	Release Date	Function Change
1.0	1.0	MAY-2021	

2. Introduction

SVF128 Vortex flow meter is a smart vortex flow meter utilizing “Karman vortex” theory to measure the velocity of fluid then calculate the flow rate in volume or mass. VFM128 is to use for various fluids such as gas, steam and liquid. The flow meter come with local or remote display and different type output such as 4-20mA, pulse, RS485 ModbusRTU, Hart for easily integrate into any PLC, SCADA, DCS system. The flow meter can be upgraded with latest wireless connectivity such as Sub-GHz, LoRaWAN, Sigfox, NB-IoT, 3G/4G... allow it to connect to any IoT platform such as Globiots, Azure, AWS...

Typical Applications: Saturated Steam, Super-heated Steam, Compressed Air, Liquid, Industrial Gases: Nitrogen, Oxygen... or Fuel Gas: Natural Gas...

SVF128-H1.PNG

3. Specification

Process Fluids	Liquid, Gas, Steam, Compressed Air
Process connection	Flange or Wafer for size DN15~DN300 or 0.5 inch to 12 inch
Local Display	Standard integral LCD display. Optional Remote display with 10m cable
Measurable Parameters of standard version	Volumetric flow rates and totalizer, velocity.
Measurable Parameters of Multi-variables version	Mass flow rate, volumetric flow rate, temperature, pressure, velocity.
Output	Pulse, 4~20mA (HART V5, V7 @4~20mA), ModBus-RTU RS485
Process Pressure	1.6MPa (232 psiG),2.5MPa (362 psiG),4.0MPa (580 psiG),6.3Mpa (913 psiG) for option
Process Temperature	Standard type: -40 ~ 150 °C or -40 ~ 302 °F Medium type: -40 ~ 250 °C or -40 ~ 482 °F High temperature type: -40 ~ 350 °C or -40 ~ 662 °F
Gas flow Turndown	DN15, DN20: Turndown ratio 10:1 DN25, DN32: Turndown ratio 15:1 DN40~DN300: Turndown ratio 30:1
Steam flow Turndown	DN15, DN20: Turndown ratio 11.6:1 DN25, DN32: Turndown ratio 17.5:1 DN40~DN300: Turndown ratio 35:1
Liquid flow Turndown	23:1
Accuracy	Gas/Steam: ±1%RD(Re ≥ 20000), ±2%RD(10000 ‹ Re ‹ 20000) Liquid: ±0.75%RD(Re ≥ 20000), ±2%RD(10000 ‹ Re ‹ 20000)
Repeatability	±0.3% of flow reading, ±0.05 °C for temperature, ±0.05%FS of pressure
Upstream/Downstream required	15D / 5D
Viscosity allowance	DN15 or 0.5 inch ≤ 4mPas DN25 or 1 inch ≤ 5mPas DN40~DN300 or 1.5~12 inch ≤ 7mPas
Anti-vibration (both punch and fixed freq)	0.5g
Power Supply	15.5 .. 42 VDC

4. Measuring principle

Vortex flowmeter measures the flow by sensing the vortices in the flow according to “Karman Vortex Street”. When put an shedder in the path of flow, vortices are alternately shed on each side (see picture 4.1)

Picture 4.1: Von Karman Vortex

The frequency of vortices (f) is in direct ratio with velocity of flow (v) and in inverse ratio with width of obstacle (d).

f=St*v/d (formula 1)

v=fd/St (formula 2)

St is Strouhal Number, is a dimensionless constant related to shape of the shedder, which can be get by testing. St is Strouhal Number, is a dimensionless constant related to shape of the shedder, which can be get by test.

Because d and St is constant, flow velocity (v) and average velocity (v0) also have certain relationship (v0=v/(1-1.25d/D)), so, you could get v0 by having the frequency of vortices shedding (f) , and then get the mass flow. The ration between quantity of vortex in a certain period of time and the volume of the flow pass by is called coefficient of the instrument (K)

K=N/V (formula 3)

VFM60 series digital vortex flowmeter is designed to provide most reliable performance. This series of vortex flowmeter is designed on Comate Intelligent Sensor PA60 platform .Every parts utilized is universal for all VFM60 series products. The circuit boards use signal isolation and self-diagnose technology. VFM60 series utilize spectrum analyzing signal process technology, which ensured lower under measuring limit and better turndown ratio. The enhanced version use unique dual-sensor design and vibration signal analyzing technology to improve its anti-vibration capability and provide with more stable reading. VFM60 also has density calculation function as option, which means it can calculate the density and measure mass flow rate of air / saturated steam/superheated steam without secondary device. It also has AGA-NX-19 and AGA-8 algorithm to measure natural gas directly.

5. Installation

5.1 Find Most Suitable Location

(1) Ambient temperature

Please avoid installing the flowmeter at a location where temperature could dramatical changes. If the meter is under heavy heat radiation , please implement effective heat insulation and venting method.

(2) Atmosphere

Please do not install the meter at a location where the atmosphere contains a high level of corrosive substance. If can not install the meter at a better location, please make sure there is enough venting.

(3) Vibration

The meter should not be installed at a location where could have strong vibration. If the mounting pipeline could has heavy vibration, the pipe line should be hold steady by some support racks.

(4) Caution

- All screws and bolts should be tighten.
- Make sure there is not leakage point on the connection.
- The process pressure should not be higher than the meter’s rated pressure.
- Once the meter is under pressure, please do not screw the bolts and screws.

5.2 Requirement on straight pipe line

Pressure sensor:2~7D downstream of flowmeter **Temperature sensor: 1~2D downstream of pressure sensor**	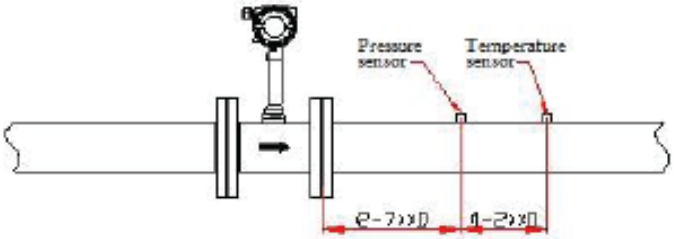
Roots blower or piston blower or air compressor in upstream	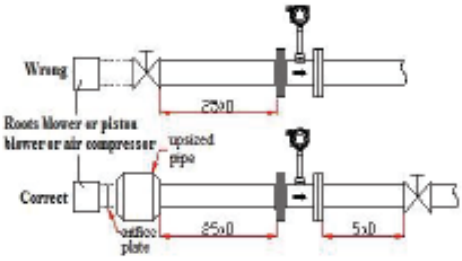 **Roots blower or piston blower or air compressor or pump in upstream, could**

	cause vibration of the fluid itself. To eliminate this vibration, please install a orifice plate or a upsized pipe at about 25D upstream the meter. The valve should be located downstream the flowmeter in this condition
After a piston pump	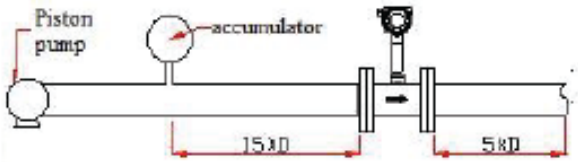 Please install a accumulator to reduce the vibration
T type pipeline in upstream	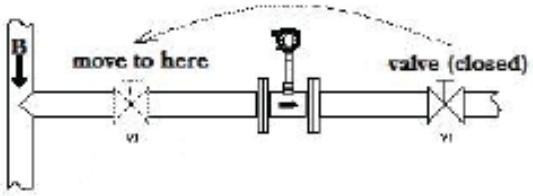 When upstream pipe line is T typethe flowmeter and a valve downstream the meter is shut (see above picture), the fluid will all flow towards direct B, but the meter may still have reading for it may be detecting the pulsating pressure. Please move the valve to upstream of the meter to avoid this situition
Gaskets should not get into the pipeline	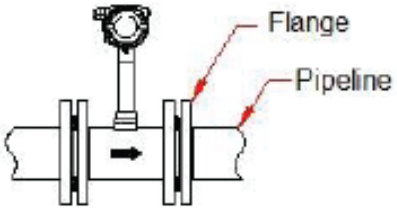
Heat insulation: If the fluid is in high temperature, the heat insulation material should not cover the heat dissipation hole on flow meter	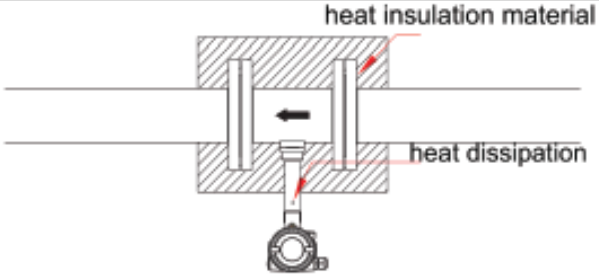
Pipe cleaning: If thepipeline need to be cleaned, please use a subtitied pipe to replace the flowmeter to invoid the meter being damaged by the cleaning fluid	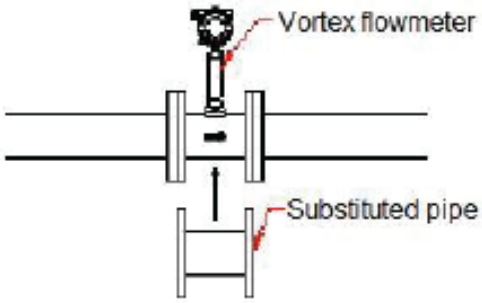

Pressure sensor:2~7D downstream of flowmeter **Temperature sensor: 1~2D downstream of pressure sensor**	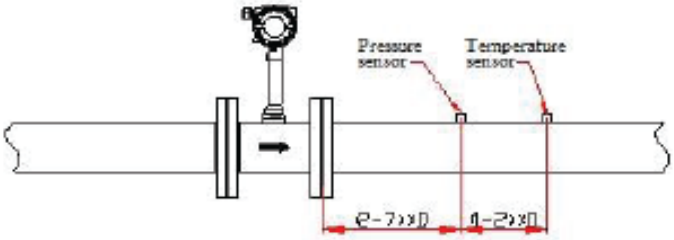

Roots blower or piston blower or air compressor in upstream	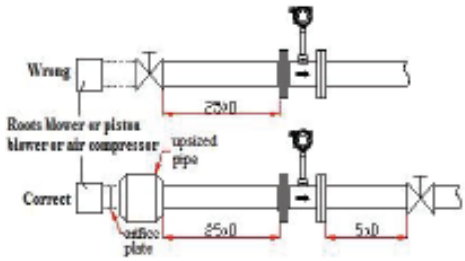 Roots blower or piston blower or air compressor or pump in upstream, could cause vibration of the fluid itself. To eliminate this vibration, please install a orifice plate or a upsized pipe at about 25D upstream the meter. The valve should be located downstream the flowmeter in this condition
After a piston pump	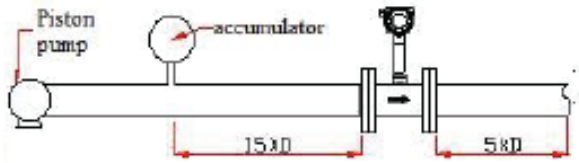 Please install a accumulator to reduce the vibration
T type pipeline in upstream	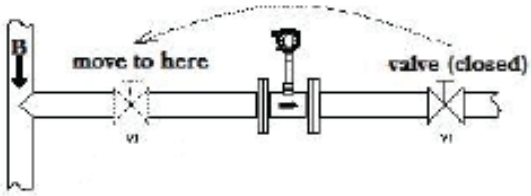 When upstream pipe line is T typethe flowmeter and a valve downstream the meter is shut (see above picture), the fluid will all flow towards direct B, but the meter may still have reading for it may be detecting the pulsating pressure. Please move the valve to upstream of the meter to avoid this situition
Gaskets should not get into the pipeline	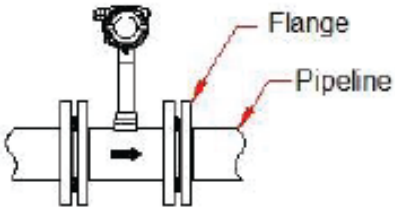
Heat insulation: If the fluid is in high temperature, the heat insulation material should not cover the heat dissipation hole on flow meter	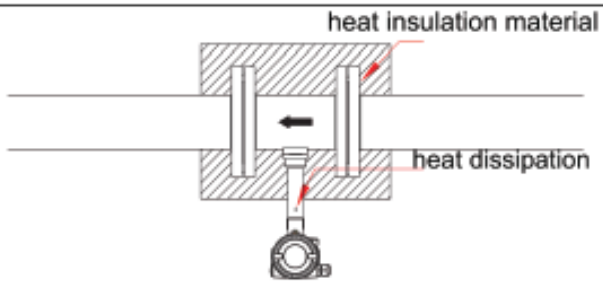
Pipe cleaning: If thepipeline need to be cleaned, please use a subtitied pipe to replace the flowmeter to invoid the meter being damaged by the cleaning fluid	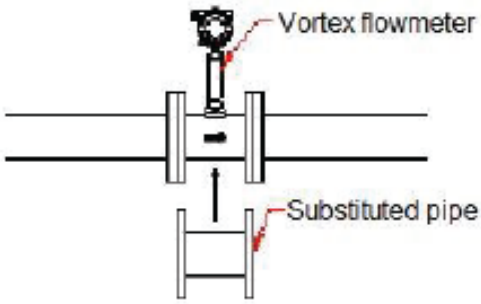

6. Wiring

VFM60 vortex flowmeter has 2 different terminal boards, the 5-terminals board and the 12 terminals board, please reference to picture 6.1 and 6.2 below.

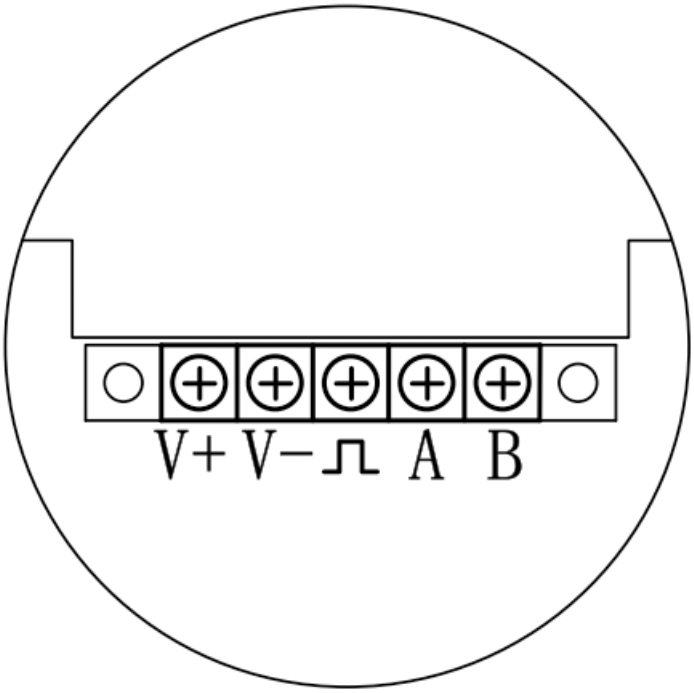

Picture 6.1: 5-terminals board

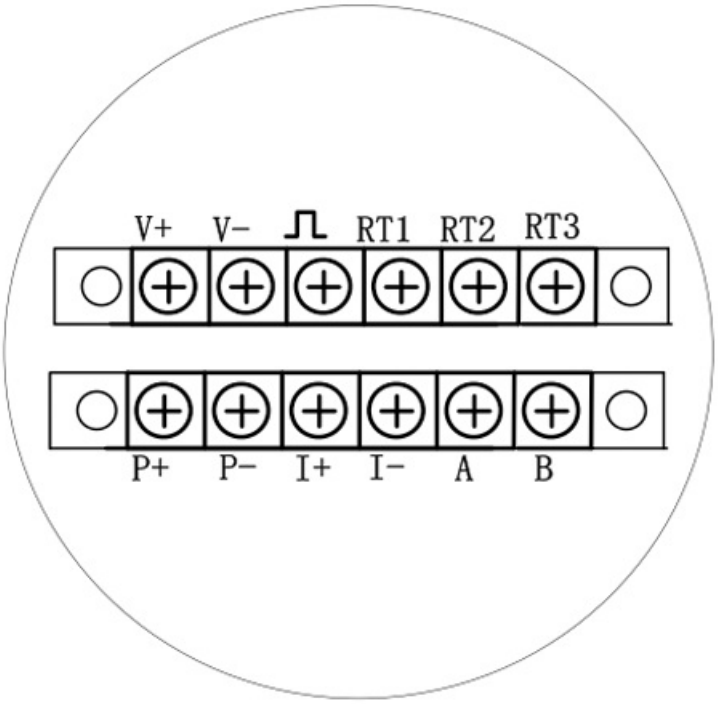

Picture 6.2: 12-terminals board

On above boards, V+ and V- are for power. ⎍ is pulse output terminal. A, B are “+” and “-” for RS485Modbus communication, I+ and I- are + and – for 3-wire or 4-wire 4~20 mA.RT1, RT2, RT3 are for separate RTD. P+,P- are for pressure transmitter . VFM60 multi –variable version has built in RTD and pressure sensor, so clients are not required to wire for temperature or pressure compensation.

6.1 Wiring for 5-terminal board

6.1.1 Wiring for 3 wire pulse output

3-wire pulse output require a power source of 13.5~42VDC. VFM use a current pulse output with 50% duty ratio. If the pulse receiving instrument require voltage pulse, please add a resistor between “⎍” and “V-”, the resistance should be within 500ohms~1000ohms, and power consumption should be no less than 0.5W.

Please reference to picture 6.3 picture below for 3-wire pulse output wiring.

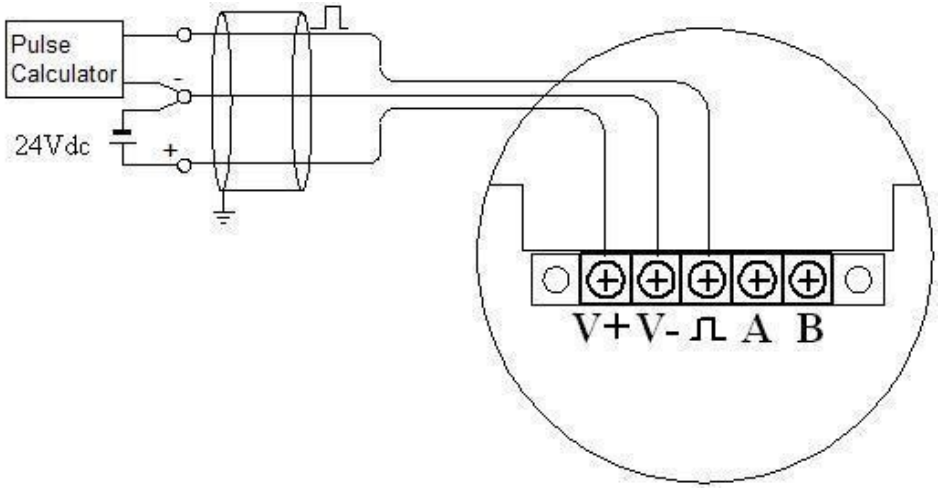

Picture 6.3: 3-wire pulse output wiring

6.1.2 Wiring for 2 wire HART@4~20mA

When there is not temperate and pressure compensation and the power source is 24VDC, the max load for 4~20mA analog is 500ohms. And when there is temperate and pressure compensation and the power source is 24VDC, the max load for 4~20mA analog is 400ohms. When using a HART communicator, please add a 250ohms load resistor

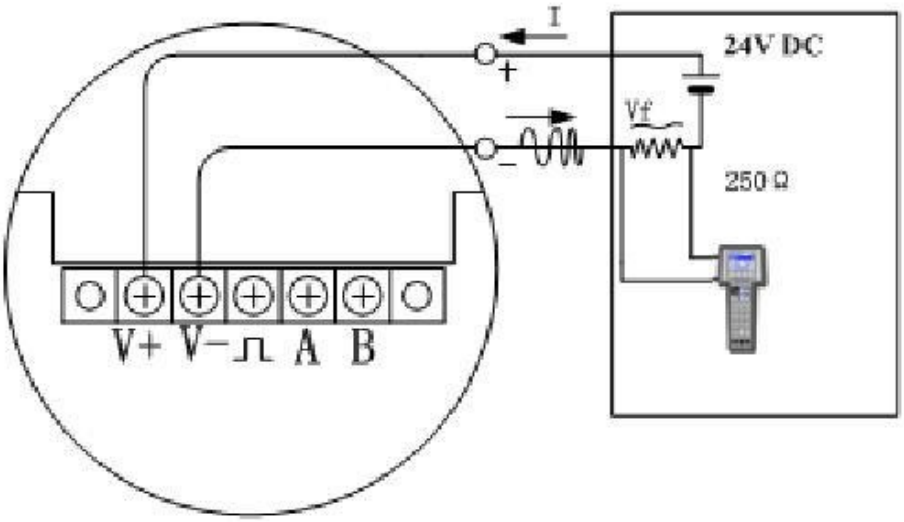

Picture 6.4: Wiring for 2 wire HART@4~20mA

6.1.3 Wiring for RS485

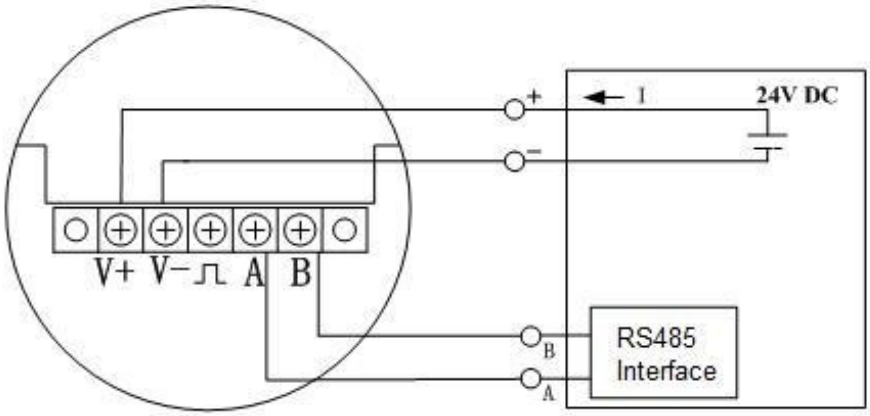

Picture 6.5: Wiring for RS485

6.2 Wiring for 12-terminal board

6.2.1 Wiring for 3 wire pulse output

3-wire pulse output require a power source of 13.5~42VDC. VFM use a current pulse output with 50% duty ratio. If the pulse receiving instrument require voltage pulse, please add a resistor between "⎍" and “V-”, the resistance should be within 500**Ω** ~1000**Ω**, and power consumption should be no less than 0.5W.

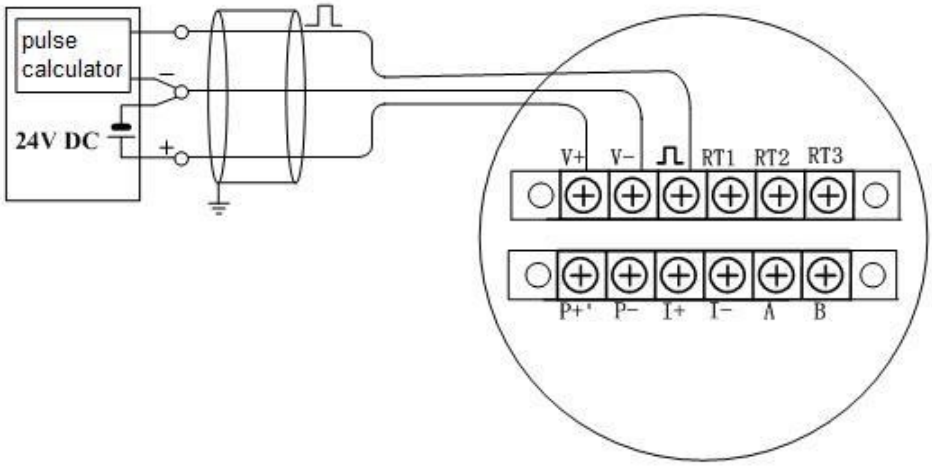

Picture 6.6: 3-wire pulse output wiring

6.2.2 Wiring for 4 wire 4~20mA

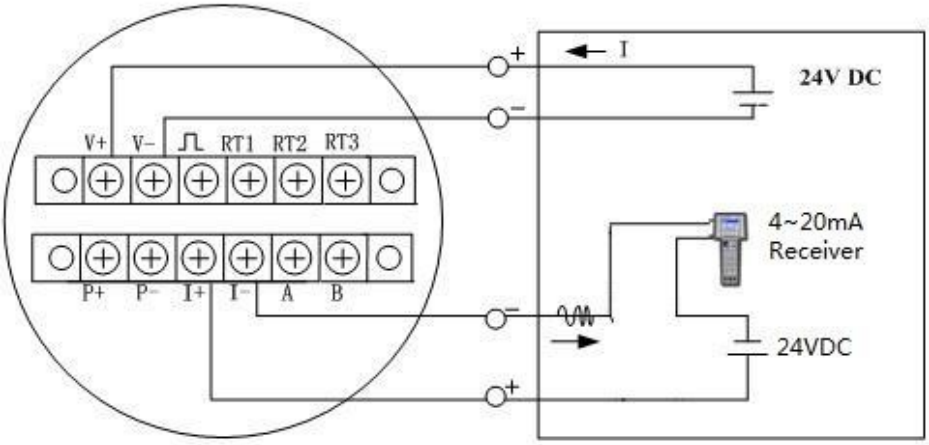

Picture 6.7: Wiring for 4-wire 4~20mA

6.2.3 Wiring for 4 wire HART@4~20mA

When power source is 24VDC, the max load for 4~20mA analog is 500Ω.

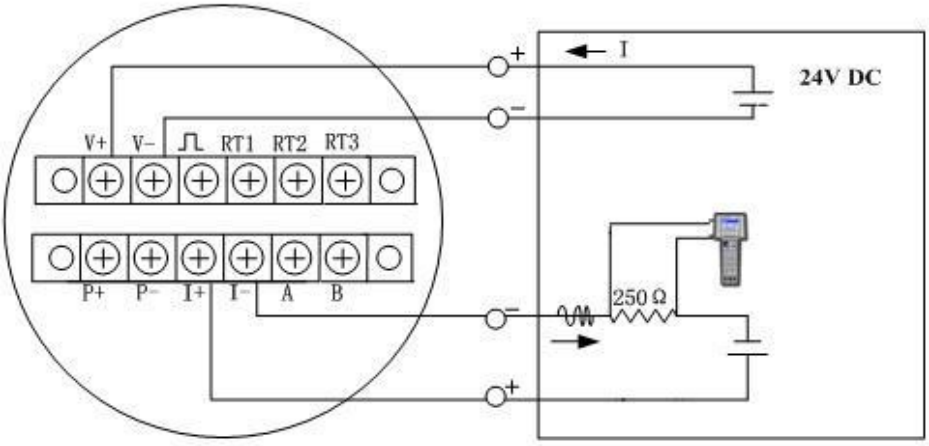

Picture 6.8: Wiring for 4-wire HART@4~20mA

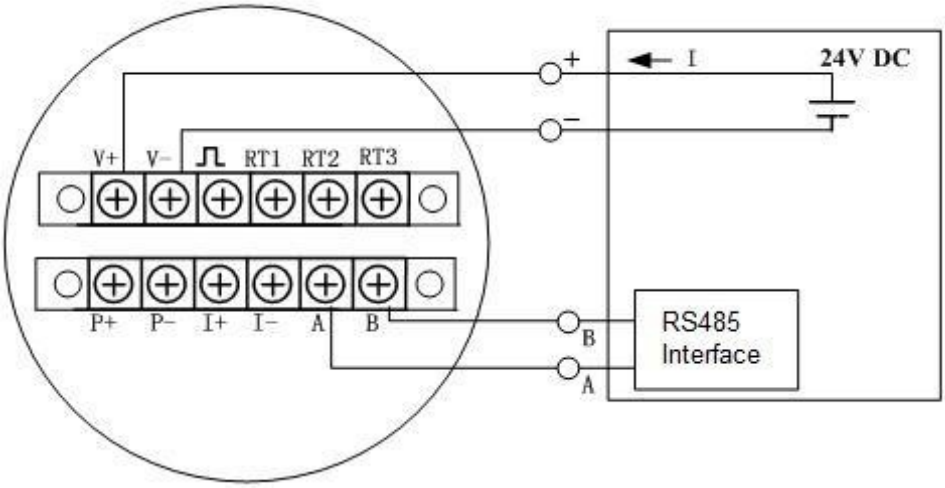

Picture 6.9: Wiring for RS485

6.3 Shell grounding and elimination of interference

In VFM60 digital vortex flowmeter the power supply of signal processing circuit is transferred from outside power supply by a isolation type DC-DC transmitter with advanced grounding technology. The field frequency interference can be isolated well.

When using this product, the “V-” of power supplier should not be connected with the ground. When this product is used in a environment with strong interference , the shell should be connect with earth through cable , so the interference can be eliminated.

6.4 Requirement on wiring

1. Please conduct wiring when the power is on in a explosive environment.
2. Please open the rear cover first, then inert the cable into back zone of housing through the water-proof cable gland.
3. Conduct wiring according to 6.1 and 6.2.
4. If possible, please conduct the wiring according to picture 6.10 to avoid the water get into the housing through the cable.

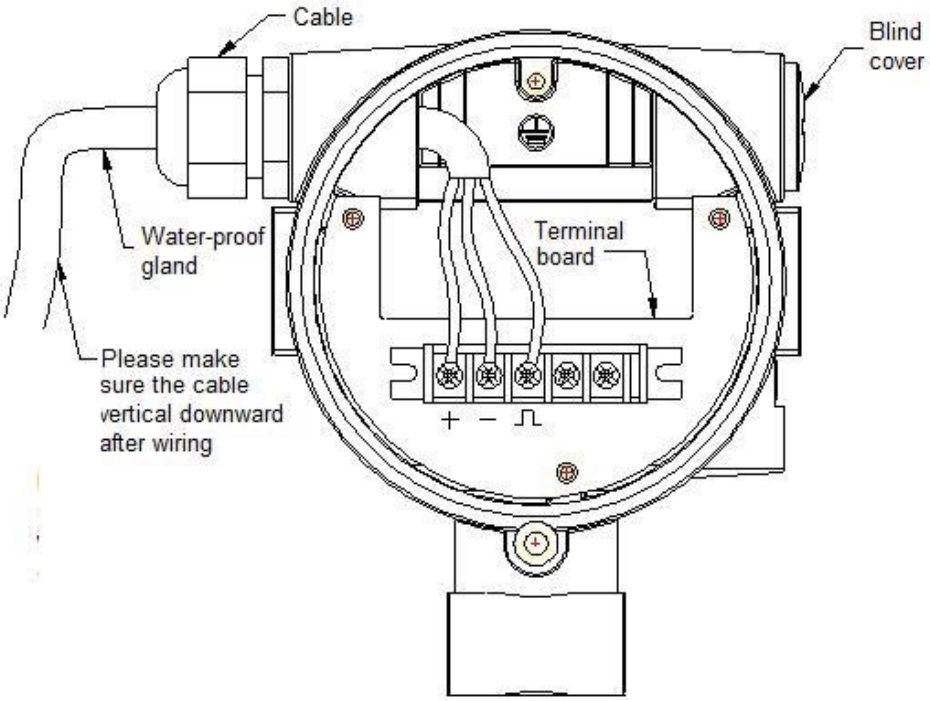

Picture 6.10: Introduction for wiring

7. Display

VFM60 digital vortex flowmeter provide local display and setting, can display several variables on the local multi-functional LCD display. The convertor also have 3 button so clients can do setting on it.

7.1 Instruction of multi-functional LCD display

VFM60 digital vortex flowmeter has a display to indicate “Frequency” “Flow rate” “Total flow”. The VFM60 multi-variable version or a standard VFM60 working with RTD and pressure transmitter can also indicate other variables such as “Temperature” “Pressure” “Density” “Mass flow” etc. Please reference to picture 7.1 below.

Picture 7.1: LCD display

The LCD display has 2 areas to display the content, the upper row, the lower row. The upper row displays the flow rate/mass flow/standard flow rate. Below the upper row shows the unit of the variable displayed in upper row.

The lower row display indicates other variables, such as frequency/ pressure/ temperature/ density/total flow/ velocity. And below the lower row shows the unit of the variable displayed in lower row.

Please reference to picture 7.2 for display

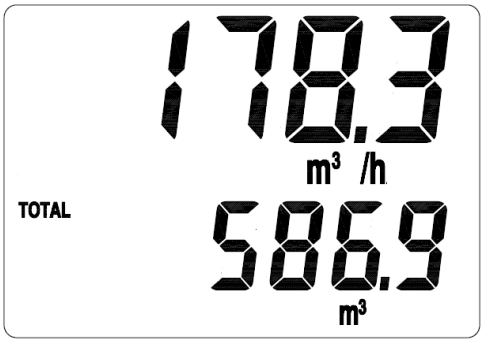

Picture 7.2: Flow rate and total flow

VFM60 multi-variable version or normal version with temperature and pressure compensation, can calculate and display the mass flow of steam, both saturated steam and superheated steam. Please reference to picture 7.3 for mass flow rate displaying.

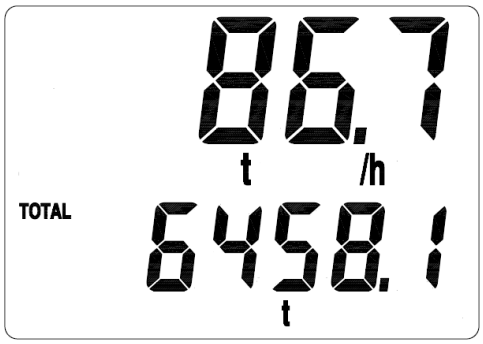

Picture 7.3: Mass flow and total flow of steam displaying

VFM60 multi-variable version or normal version with temperature and pressure compensation can display variables such as temperature/ pressure/ density. Use the switch button to switch to next variable and it will display for **30 seconds.**

Please reference to picture 7.4 as a sample of temperature displaying. You can also keep the lower row consistently display a variable by setting. The default variable displayed in lower row is total flow.

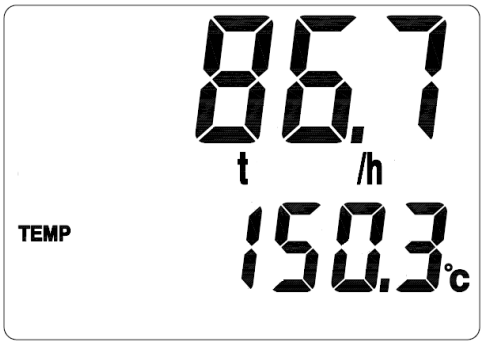

Picture 7.4: Lower row is displaying temperature

You can also set the lower row to display several variables in circular turn.

7.2 Unit of the variable displayed

The variables that can be displayed in lower row and their units that can be displayed are as the chart 7.1 below.

Subject	Variable	Unit	Circular display code
TOTAL	Total flow	Nm^3, m^3, L, kg or t	01
TEMP	Temperature	℃	02
PRES	Pressure	MPa or kPa	03

FREQ	Frequency	Hz	04
DENS	Density	kg/ m^3	05

Chart 7.1: The displayed units

VFM60 series digital vortex flowmeter has three buttons on the top of the displayer, which are:

[↔]	will be mentioned as “L-R button” below
[↕]	will be mentioned as “U-D button” below
[↲]	will be mentioned as “Enter button” below)

Please reference to below picture

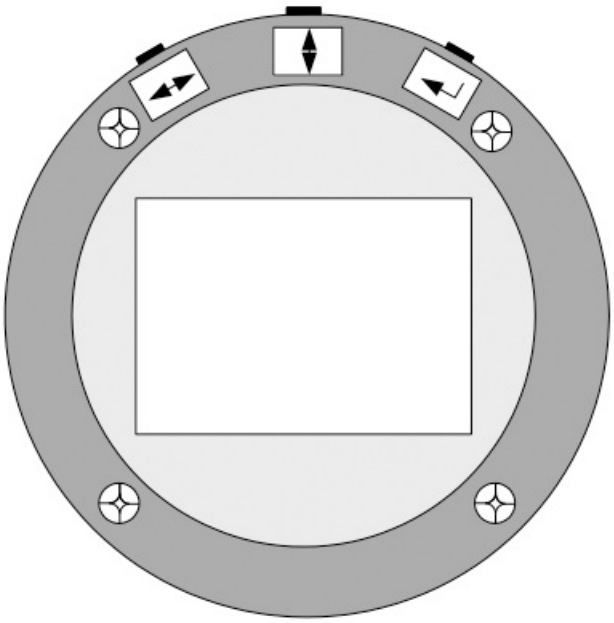

Picture 7.5: Buttons

When under working, use “U-D button” to switch the displaying content, use “L-R button” can switch to the left and right digits of total flow. “Enter button” is to display the entire digits of total flow directly.

When the flowmeter is under setting mold, the “L-R button” means move to left and right to select the digit, the “U-D button” means to set the digit to a number, the “Enter button” means “confirm”. All the “Digital setting” and “Code setting” of VFM series vortex flowmeter is made through these 3 buttons.

Please reference to related article for details.

7.4 Total flow displaying

VFM60 can display 9 digits left to decimal point and 3 digits right to it. When the there is more than six digits, the total flow reading will be displayed in two times. One time displays the right digits and the other displays the left digits. You can use the “L-R button” to switch between the right digits and left digits. The left digits will be displayed with a mark of “x1000”.

Please reference to picture 7.6

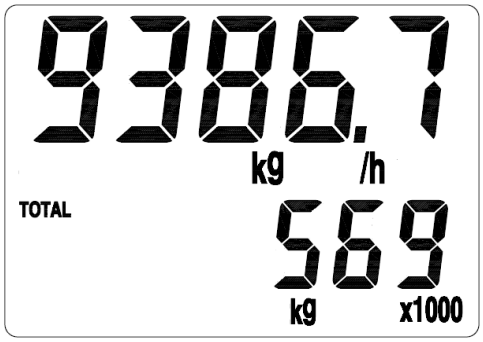

Picture 7.6: Displaying the left digits, a “x1000” mark is displayed

If you want to check the right digits now, please pressure the “L-R button” , the display will be as picture 7.7 below.

Picture 7.7: Displaying the right digits

According to picture 7.6 and 7.7, the total flow is 569864.581 kg.

7.5 Status

VFM60 series vortex flowmeter have three different statuses as below

- **Working status**
- **Setting status**
- **Calibration status**

When under working status, please follow the instruction in 7.1 to switch the parameter displayed.

When under setting status, you can set the flowmeter, while the flowmeter is still processing, so setting will not have effect on the measuring. In next chapter, there will be instruction of how to do setting.

The calibration of the flowmeter has been finished in manufacture’s lab before delivery, including temperature and pressure calibration and the setting of high-limit and low-limit of 4~20mA simulation output. Thus, customers don't need to do anything.

8. Setting

Note: Every VFM60 digital vortex flowmeters has been set according to requirement before delivery, please do not change setting unless it is necessary and under correct instruction!

VFM60 series digital vortex flowmeter have digital setting and code setting. Use code setting to set parameters such as fluid type, compensation type and output signal. Use digital setting to set parameters related to a number, such as pipe size, flow range, factor.

8.1 How to set

8.1.1 Code setting

Under working status, to enter code setting, please hold “Enter button” then press “U-D button” at the same time. Please reference to picture 8.1.

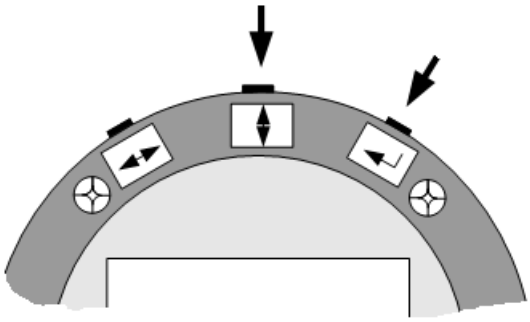

Picture 8.1: Enter and quit code setting

When in code setting, the first row will display the reference number of the code setting, and the lower row will display the contents of this parameter. The digit that is flashing is the digit under setting. Please reference to picture 8.2, which means C01=02, means fluid type is liquid.

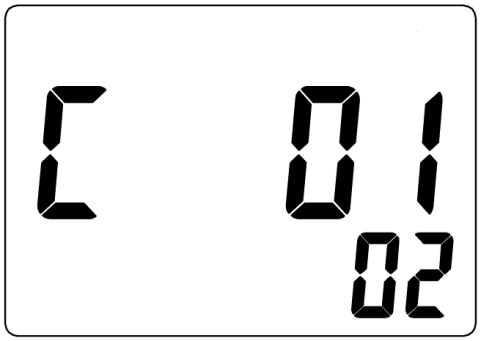

Picture 8.2 Code setting

When under code setting, Now ,user can use “L-R button” to choose which digit on the displayer are to be set , and use “R-D button” to switch the digit to 0~9 . The first time of pressing “Enter button” means to set the lower row. Press “Enter button” again to check if the setting is available. If setting is available, the setting made will be canceled and the display will not flash, then press “L-R button” or “U-D button” to set again. When display is not flashing, pressure “Enter button” to save and go to next setting.

If want to quit code setting, same as entering, please hold “Enter button” then press “U-D button” at the same time.

8.1.2 Digital setting

Under working status, to enter code setting, please hold “Enter button” then press “L-R button” at the same time. Please reference to picture 8.3.

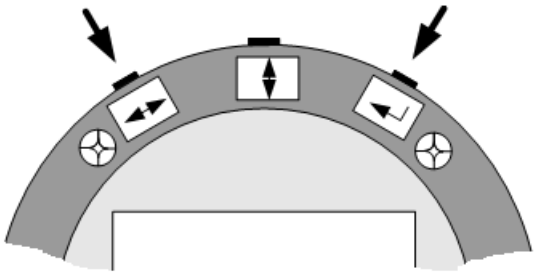

Picture 8.3: Enter or quit digital setting

When in digital setting, the first row will display the reference number of the digital setting, and the lower row will display the contents of this parameter. The digit that is flashing is the digit under setting. Please reference to picture 8.4, which means D001=1.60000, max pressure is 1.6 (unit according to other setting.)

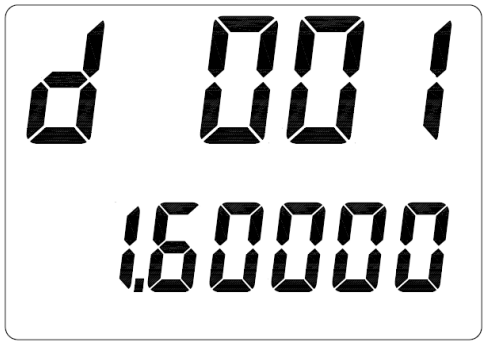

Picture 8.4: Digital setting

When under digital setting, Now, user can use “L-R button” to choose which digit on the displayer are to be set , and use “R-D button” to switch the digit to 0~9 . The first time of pressing “Enter button” means to set the lower row. Press “Enter button” again to check if the setting is available. If setting is available, the setting made will be canceled and the display will not flash, then press “L-R button” or “U-D button” to set again. When display is not flashing, pressure “Enter button” to save and go to next setting.

If want to quit code setting, same as entering, please hold “Enter button” then press “U-D button” at the same time.

8.2 Setting list

Please check chart 8.1 and 8.2 for code and digital setting address list.

Chart 8.1: Code setting address

Code setting address	Item	Code	Description of code
01	Fluid	00	Steam
		01	Gas
		02	Liquid
02	Density compensation	00	Volume flow display, no density compensation
		01	Density preset
		02	Pressure compensation (for saturated steam pressure not larger than 20Mpa
		03	Temperature compensation (For saturated steam)
		04	Temperature and pressure compensation (For superheated steam)
		05	ρ=A+BP (Pressure compensation)
		06	ρ=A+BT (Temperature compensation)
		07	AGA-NX-19 to calculate compressibility factor
		08	Temperature and pressure compensation to get normal condition flow rate of gas
		09	AGA-8 to calculate compressibility factor
		10	Air compressor output flow analysis
		01	Pulse (Please reference to D008 for K factor)

05	Output	02	4~20mA or HART@4~20mA
		03	200-1000HZ frequency output, set what to output in C06
		04	frequency output for total flow, set factor in D013
06	4~20mA or 4~20mA@HART or 200-1000Hz output parameter	00	Flow rate
		01	Temperature
		02	Pressure
07	Damping	01~99	1~99 seconds
08	Instrument number	00~99	For Modbus
		00~15	For Modbus or HART communication
09	Baud rate	01	1200 no parity 1 stop bit
		02	1200 even parity 1 stop bit
		03	2400 no parity 1 stop bit
		04	2400 even parity 1 stop bit
		05	4800 no parity 1 stop bit
		06	4800 even parity 1 stop bit
		07	9600 no parity 1 stop bit
		08	9600 even parity 1 stop bit
		09	19200 no parity 1 stop bit
		10	19200 even parity 1 stop bit
		11	1200 odd parity 1 stop bit
		12	2400 odd parity 1 stop bit
		13	4800 odd parity 1 stop bit
		14	9600 odd parity 1 stop bit
		15	19200 odd parity 1 stop bit
		16	38400 no parity 1 stop bit
		17	38400 even parity 1 stop bit
		18	38400 odd parity 1 stop bit
		19	57600 no parity 1 stop bit
		20	57600 even parity 1 stop bit

		21	57600 odd parity 1 stop bit
		22	115200 no parity 1 stop bit
		23	115200 even parity 1 stop bit
		24	115200 odd parity 1 stop bit
10	Time unit for flow rate	00	/s
		01 02	/min /h
		03	/day
11	Mass unit	01	kg
		02	ton
		03	lb
12	Volume unit for flow rate	01	m3
		02	L
		03	ft3
		04	US gal
		05	UK gal
13	Pressure unit	01	Mpa
		02	Kpa
		03	Psi
14	Temperature unit	01	℃
		02	℉
		03	K
15	Right digits number for total flow	00~05	00 : No right digits for total flow
			01~05 : 1~5 right digits for total flow
16	1st row display parameter	01	Flow rate
		02	Percentage of flow rate to flow range
		00	No display

17	lower row display parameter	01	Total flow
		02	Temperature
		03	Pressure
		04	Density
		05	Frequency
18	Density unit	01	Kg/m3
		02	lb/ft3
19	Decimal of flow rate	00~04	00: No right digits for flow rate 01~04: 1~4 right digits for flow rate
20	Decimal of temperature	00~04	00: No right digits for temperature 01~04: 1~4 right digits for flow rate
21	Decimal of pressure	00~04	00: No right digits for pressure 01~04: 1~4 right digits for pressure
30	Time space for circle display	00~30	00 : circle display off
			1~30 : 1~30 seconds between the display of different parameter
31	First parameter displayed in circle display	00~05	00 : circle display off 01~05 : see chart 7.1
□	□	□	....
35	Last parameter displayed in circle display	00~05	Same as above
38	Sequence of float (under RS485 communication)	01	LL_LH_HL_HH
		02	HH_HL_LH_LL
		03	LH_LL_HH_HL
		04	HL_HH_LL_LH
47	Password function	00	off
		01	on
48	Set password	00	Keep the password
		01	Change the password
49	Spectrum analyzing checking	00	Working status
		12	spectrum analyzing checking

50	Total flow reset	00	Reset total flow to 0
		01	Default
55	Times of over total flow	00~99	For reading only
60	Restore to backup date	06	Restore to backup date
61	Save setting backup	16	Save current setting for backup

Note:

If the unit of flow rate is changed or measurement changed from flow rate to mass flow, users can reset the total flow to 0 or record the current total flow.

Total flow=(time of over total flow)* (max display of total flow)+(current total flow reading)

Chart 8.2: Digits setting address

Digital setting address	Item	Code	Description of code
001	Max pressure	[-99999 , 999999]	Max input/output pressure
002	Min pressure	[-99999 , 999999]	Min input/output pressure
003	Max temperature	[-99999 , 999999]	Max input/output temperature
004	Min temperature	[-99999 , 999999]	Min input/output temperature
005	Preset density	(0 , 999999]	When C02=01, the meter will use this density, unit according to setting
008	K factor	(0 , 999999]	K factor according to calibration result, unit is pulses/Liter. Flow=3.6*freq/K
009	Max flow rate	(0 , 999999]	unit is same as flow rate, Max/min flow rate of 4~20mA and 200~1000Hz output
010	Min flow rate	[0 , 999999]	
011	Max frequency	[0 , 999999]	Up-limit of frequency (Hz) output
012	Min frequency	[0 , 999999]	Down-limit of frequency (Hz) output
013	pulse factor for total flow	(0 , 999999]	used when freq output of total flow
014	Ambient pressure	(0 , 999999]	Unit according to setting
015	Pipe size	(0 , 999999]	unit is mm
021	Cut off small signal	[0 , 999999]	unit is Hz

022	Standard temperature	[0 , 999999]	unit is °C; for standard flow rate calculation
023	Temperature of air compressor inlet	[-40 , 999999]	Unit is °C, for air compressor flow outlet analysis
024	Pressure of air compressor inlet	(0 , 999999]	Unit is Mpa, for air compressor flow outlet analysis
025	Temperature preset	[-99999,999999]	Unit is °C
026	Resonance frequency starting frequency	(0 , 999999]	For high speed steam measure use
027	Resonance frequency ending frequency	(0 , 999999]	For high speed steam measure use
030	Relative density of compressibility factor	[0.55 , 0.90]	For calculation of compressibility factor of natural gas
031	mol% of N2 and H2	[0 , 0.1]	For calculation of compressibility factor of natural gas, eg.if 1%, please input 0.01
032	mol% of CO2	[0 , 0.3]	For calculation of compressibility factor of natural gas, eg.if 1%, please input 0.01
033	Higher heating value	[20 , 48]	MJ/mol, For calculation of compressibility factor of natural gas

Note: Max freq output=10KHz, the pulse factor for total flow should be set properly set according to the current total flow.

8.3 Example of setting

Sample: For vortex flowmeter VFM60, measure gas in DN50 pipe, K factor= 7.802P/L, density preset, mass flow display unit is kg/h. 4~20mA output with a flow range of 0~4000kg/hr

	Address	**Code**	**Description**
Code setting	01	01	gas
	02	01	Density preset
	05	02	4~20mA analog output
Digital setting	005	2.0000	Density=2
	008	7 . 802	K factor=7.802 P/L
	009	4000	Flow rate of 20mA
	010	0	Flow rate of 4mA
	015	50	Pipe size=50mm

8.4 Password setting instruction

There is no password set in default in a new VFM60 digital vortex flowmeter ,users can set a password following instruction below.

Enter code setting, set C47=01, confirm and quit then enter the password setting interface as picture 8.5

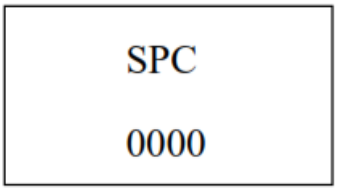

Picture 8.5: Password setting interface

To set a new password, users have to input the correct password twice, the password will become effective only if the both inputs are the same; or users have to input again. If the power is off during a password setting process, the password will be 2000 as default. When a password becomes effective, users have to input the correct password before he can set the flowmeter, please reference to picture 8.6.

If users input incorrect password 3 times consistently, the display will come back to normal display

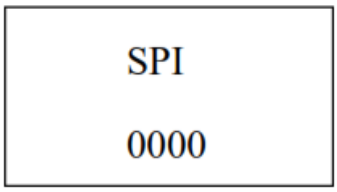

Picture 8.6: Password input

If a password has been set to a VFM60 vortex flowmeter, users can enter code setting C48=01 to set a new password.

9. Instruction of Modbus Communication

9.1 Interface regulation

- The communication interface should be RS485, the range of Baud rate should be 1200~115200.
- The wiring terminal is “A” and “B”.
- The communication should comply with MODBUS-RTU statute.
- The combination of a communication signal: Address code - function code – date segment – CRC calibration code. The distance between two characters should not be longer than one character, or it will be considered as the beginning of a new message or the end of a old message. The message is combined with hexadecimal arrays.
- Definition of the dates: Please reference to the chart 9.1 below.

Chart 9.1: Address of the displayed date

Register address	Usage	Nature	Date type
0~1	Flow rate	Read only	Float
2~3	Frequency	Read only	Float
4~5	Reserved	Read only	Float
6~7	Pressure	Read only	Float
8~9	Temperature	Read only	Float
10~11	Density	Read only	Float
12~13	Reserved	Read only	Float
14~15	Reserved	Read only	Float
16~17	Reserved	Read only	Float
18~19	Reserved	Read only	Float
20~21	Reserved	Read only	Float

22~23	Reserved	Read only	Float
24~25	Total flow	Read only	Float

The displayable date including flow rate, frequency, pressure, temperature, density and total flow, if the meter do not have density compensation, then the reading of pressure and temperature will both be 0. The date of the parameters in above chart can be read by using function code 03 according to the address above and shifting.

The addresses of code setting are as below.

Chart 9.2: Address of code setting

Register	Usage	Range	Nature	Date type
1000	Fluid type C01	1~2	Read only	Short
1001	Density compensation C02	0~9	Read/Write	Short
1004	Output C05	1~4	Read/Write	Short
1005	200-1000Hz output parameter C06	1~3	Read/Write	Short
1006	Damping C07	1~99	Read/Write	Short
1007	Instrument number C08	Hart(0~15) MB(1~99)	Read	Short
1008	Baud rate C09	1~24	Read	Short
1009	Unit of time C10	0~2	Read/Write	Short
1010	Mass unit C11	1~3	Read/Write	Short
1011	Volume unit C12	1~5	Read/Write	Short
1012	Pressure unit C13	1~4	Read/Write	Short
1013	Temperature unit C14	1~3	Read/Write	Short
1014	Right digits number for total flow C15	0~5	Read/Write	Short
1015	1st row display parameter C16	1~2	Read/Write	Short
1016	lower row display parameter C17	0~5	Read/Write	Short
1017	Density unit C18	1~2	Read/Write	Short
1029	Time space for circle display C30	0~30	Read/Write	Short
1030	First parameter displayed in circle display C31	0~5	Read/Write	Short
1031	Second parameter displayed in circle display C32	0~5	Read/Write	Short
1032	Third parameter displayed in circle display C33	0~5	Read/Write	Short

1033	Fourth parameter displayed in circle display C34	0~5	Read/Write	Short
1034	fifth parameter displayed in circle display C35	0~5	Read/Write	Short
1035	C36	0~1	Read/Write	Short
1036	C37	0~10	Read/Write	Short
1037	Sequence of float C38	1~4	Read/Write	Short
1046	Password function C47	0~1	Read	Short
1047	Set password C48	0~1	Read	Short
1048	Spectrum analyzing checking C49	0~12	Read/Write	Short
1049	Total flow reset to 0 C50	0~1	Read/Write	Short
1050	C51	0~0	Read/Write	Short
1051	C52	0~99	Read/Write	Short
1052	C53	0~0	Read/Write	Short
1053	C54	0~0	Read/Write	Short
1054	Times of over total flow C55	0~0	Read only	Short
1059	Restore to backup date C60	0~99	Read/Write	Short
1060	Save setting backup C61	0~99	Read/Write	Short

Users can use function code 04 and 06 to access to the address for code setting above.

Digital setting address is as below.

Chart 9.3: Address of digital setting

Register	Usage	Restriction of modification	Nature	Date type
2000~2001	D001 Max pressure	-1e5~1e6	Read/Write	Float
2002~2003	D002 Min pressure	-1e5~1e6	Read/Write	Float
2004~2005	D003 Max temperature	-1e5~1e6	Read/Write	Float
2006~2007	D004 Min temperature	-1e5~1e6	Read/Write	Float
2008~2009	D005 Density	0~1e6	Read/Write	Float
2014~2015	D008 K factor	0~1e6	Read/Write	Float
2016~2017	D009 Max flow rate	0~1e6	Read/Write	Float
2018~2019	D010 Min flow rate	0~1e6	Read/Write	Float
2024~2025	D013 Factor for total flow output	0~1e6	Read/Write	Float
2026~2027	D014 Ambient pressure	0~1e6	Read/Write	Float
2028~2029	D015 Pipe size	0~1e6	Read/Write	Float
2040~2041	D021 Cut off small signal	0~1e6	Read/Write	Float

2058~2059	D030 Specific density	[0.55 , 0.90]	Read/Write	Float
2060~2061	D031 mol% of N2 and H2	[0 , 0.1]	Read/Write	Float
2062~2063	D032 mol% of CO2	[0 , 0.3]	Read/Write	Float
2064~2065	D033 Higher heating value	[20 , 48]	Read/Write	float

The chart above indicates the register address, usage of the register, restriction of modification, read/write nature and date type. The register above are all holding register, the supporting function code is 03,04,06,16 function code.

9.2 Commends

Function code 03 and 04 are the codes supported for reading the registers. Function code 06 is for writing one register. Function code 16 is for writing multi registers. Function code 06 is only supported for writing short date. Function code 16 is supported for writing both short date and float date.

Function code 03 – Read register

Request	Response
01 : Address	01: Address
03 : Function code	03 : Function code
00 : Register address higher	04 : Quantity of bit
00 : Register address lower (display the address)	80 : Date 1
00 : Register number higher	04 : Date 2
02 : Register number lower	80 : Date 3
CRCL : CRC Parity code lower	80 : Date 4
CRCH : CRC parity code higher	CRCL : CRC Parity code lower
	CRCH : CRC parity code higher

Note: To read a float date, the quantity of the register address and its value have to be even, or response will be error.

Function code 04 – Same as function code 03

Function code 06 – write one register

Request	**Response**
01 : Address	01: Address
06 : Function code	06 : Function code
00 : Register address higher	00 : Register address higher
01 : Register address lower (code setting address)	01 : Register address lower
00 : Value higher	00 : Value higher
04 : Value lower	04 : Value lower
CRCH : CRC parity code higher	CRCH : CRC parity code higher
CRCL : CRC Parity code lower	CRCL : CRC Parity code lower

Note: Function code is only supported for writing short dater.

Function code 16- write multi register.

Request	Response
01 : Address	01: Address
10H : Function code	10H : Function code
00 : Register address higher	00 : Register address higher
01 : Register address lower (digital setting address)	01 : Register address lower
00 : Quantity of register higher	00 : Quantity of register higher

02 : Quantity of register lower	02 : Quantity of register lower
04 : Quantity of values	CRCH : CRC parity code higher
86h : Value 1	CRCL : CRC Parity code lower
00 : Value 2	
00 : Value 3	
48H: Value 4	
CRCH : CRC parity code higher	
CRCL : CRC Parity code lower	

Note: Function code 16 is supported to write both short date and float date. But for float date, the first register address and the quantity of the registers must be even, or writing is not allowed.

9.3 Calculation of CRC parity code

Request	Response
01 : Address	N1 CRC=0FFFFH is initial value
10 : Function code	N2 XOR operation the CRCL and N1
00 : Register address higher	N3 CRC move 1 bit right , if move out is 1 bit
01 : Register address lower	N4 CRC=CRC XOR A001H
00 : Register quantity higher	N5 if move out is 0 , CRC=CRC
04 : Register quantity lower	N6 Move right for 8 times to finish the N1 calculation
04 : Date quantity	N7 ...
80 : Date 1	N8 XOR operation the CRCL and N11
04 : Date 2	N9 CRC move 1 bit right , if move out is 1 bit
80 : Date 3	N10 CRC=CRC XOR A001H
80 : Date 4	N11 if move out is 0 , CRC=CRC
CRCL : CRC Parity code lower	Move right for 8 times to finish the N11 calculation
CRCH : CRC Parity code higher	Get the CRC calibration value

9.4 The float date format of the instrument

The storage sequence of 4 bits float format is as below:

Address	0	1	2	3
Content	MMMMMMMM	MMMMMMMM	EMMMMMMM	SEEEEEEEE

Use IEEE standard method, do not store 1 on top digit, if top digit is 1, means negative; if top digit is 0, means positive. So the 23 mantissas and a 1 on top digit, which is concealed, constitute a 24 bits fixed point true form decimal, which is a decimal have mantissas less than 1 and more than or equal to 0.5. The lowest 8 bits are exponent-marker using shift code method. The exponent marker equals to the actual value minus 127. For example: 7=86H-7FH, -10=75H-7FH

e.g.: 100=0x00,0x00,0x42,0xc8

-100=0x00,0x00, 0xc2,0xc8

0=0x00.0x00.0x00.0x00 (exponent-marker is 0, the number is 0)

9.5 The sequence of the float date bytes of instrument

Code setting C38 is used for setting the sequence of the float date bytes of instrument. Float date will occupy 4 bytes (2 registers). To set the bytes order of float date, please modify register :

1: LL_LH_HL_HH the lower 16 bytes registers come first, the lower 8 bytes within the 16 bytes registers come first.

eg: 100=0x00,0x00, 0xc8, 0x42

-100=0x00,0x00,0xc8,0xc2
2: HH_HL_LH_LL the higher 16 bytes registers come first, the higher 8 bytes within the 16 bytes registers come first.
eg: 100=0x42,0xc8,0x00,0x00
-100=0xc2,0xc8 ,0x00,0x00
3: LH_LL_HH_HL the lower 16 bytes registers come first, the higher 8 bytes within the 16 bytes registers come first.
eg: 100=0x00,0x00,0x42,0xc8
-100=0x00,0x00,0xc2,0xc8
4: HL_HH_LL_LH the higher 16 bytes registers come first, the lower 8 bytes within the 16 bytes registers come first.
eg: 100=0xc8,0x42,0x00,0x00
-100=0xc8,0xc2,0x00,0x00

9.6 Modbus error response

When the host sends a command and asks for a correct response, one of below three is going to happen:

1) If the command from the host is correct and processable, the flow meter will give a correct response.

2) If the flowmeter received a command, but detected parity, the error of LRC and CRC will cause no response. The host will process a overtime commend.

3) If the flowmeter received a correct command, but can not process it (read or write a none-existing register etc.), the flowmeter will send a error response

A error response has two byte sections to show its difference from a correct response.

Function code section: In a correct response, the flowmeter will copy the origin function code sent from the host, and the highest bytes of them are all 0(all function codes are smaller than 0x80). In a error response, the flowmeter will set the highest bytes to 1. The host can detect the error code and know the content of the error when it detect that the highest bytes of function codes are 1.

Value section: In a error response, the flowmeter will reply a byte as the error code to definite the content of the error. Please reference to the chart below for the error codes and its definition:

Code	Name	Meaning
01	Illegal function code	Flowmeter can not process the function code in a command. Maybe this function code can only be used on a new device, or it can also indicate that the flowmeter is under error statues.
02	Illegal address	The flowmeter can not process with the address in the command. The initiate address plus address diversion are higher than the highest address.
03	Illegal contents of value	The content of the value in the command is not acceptable for the flowmeter.
04	Flow meter function failed	An unrecoverable failure happened when the flowmeter is trying to response.
05	Response	The flow meter will take a long while to process the command. So response this error code to prevent the host from processing a overtime command.
06	Flowmeter is busy	To advise the host that the flowmeter is processing a command which will takes a long time. So the host should resend the command when the flowmeter is free.

9.7 Examples of communication

The flowmeter’s instrument Modbus address is 01, baud rate=4800 (C08=01, C09=05, C38=02).

Example 1: Read flow rate F,F=916.49 (4 bytes float)

Host command : 01 03 00 00 00 02 C4 0B

Flowmeter response : 01 03 04 **44 65 1F CE** 77 78

Example 2: Read total flow

Host command : 01 03 00 24 00 02 84 00

Flowmeter reponse : 01 03 04 **44 9D 1E 3F** 36 9D

Example 3: Read all the value displayed on the flowmeter, including flow rate, frequency, pressure, temperature, density, total flow ….. all together 13 value (52 bytes)

Host command : 01 03 00 00 00 1A c4 01

- **44 65 1F CE** (flow rate = 916.49)
- **42 48 00 00** (frequency = 50)
- **00 00 00 00** (reserved = 0)
- **00 00 00 00** (pressure = 0)
- **00 00 00 00** (temperature = 0)
- **3F 80 00 00** (density = 1.00)
- **00 00 00 00** (reserved = 0)
- **00 00 00 00** (reserved)
- **00 00 00 00** (reserved)
- **00 00 00 00** (reserved)
- **00 00 04 E8** (reserved = 1256)
- **00 00 00 00** (reserved = 0)
- **44 9D 1E 3F** (total flow in float = 1256.94)
- **5A** (CRCL)
- **91** (CRCH)

10. Introduction of HART communication protocol

10.1 HART commands

10.1.1 Command 0: Read transmitter unique identifier

Command format
Return to the expansion device type code, version number and identification number

Request: None

Response:

Byte 0: 254

Byte 1: Manufacture’s ID

Byte 2: Manufacture’s device type

Byte 3: Number of request preambles

Byte 4: Revision level of universal command

Byte 5: Revision level of transmitter document

Byte 6: Software revision level

Byte 7: Hardware revision level

Byte 8: Flags, none defined at this time

Byte 9-11: Device Identification Number

Test of command

Send 0 command: FF FF FF FF FF 02 80 00 00 82; to request information of the instrument

Receive 0 command: FF FF FF FF FF 06 80 00 0E 00 00 FE 1A 1A 05 05 00 00 00 00 AD 18 8C 4F

10.1.2 Command 1: Read primary variable value (PV)

Command format:

Return to primary variable value in float.

Request: None

Response:

Byte 0: Primary variable unit code

Byte 1-4: Primary variable

Remark: The unit code is 75:kg/hour, 19:m3/hour.

Set primary command to flow rate.

Test of command:

Send command 1: FF FF FF FF FF 82 9A 1A AD 18 8C 01 00 3A ;to read the IEEE754 float value of primary variable.

Receive command 1:FF FF FF FF FF 86 9A 1A AD 18 8C 01 07 00 00 13 00 00 00 00 2A

10.1.3 Command 2: Read primary variable’s current and percentage value

Command format:

Read the current and percent of the primary variable, the current of primary variable always match the AO current output of the instrument. Percent is not restricted within 0~100%, if it is beyond the limit of primary variable, it will find the limit of the transmitter.

Request: None

Response:

Byte 0-3: Analog output current mA, IEEE754

Byte 4-7: Percent of range , IEEE 754.

Test of command:

Send command 2: FF FF FF FF FF 82 9A 1A AD 18 8C 02 00 39 ; to read the current and primary variable percent of range.

Receive command 2: FF FF FF FF FF 86 9A 1A AD 18 8C 02 0A 00 00 40 80 00 00 00 00 00 00 F7

10.1.4 Command 3: Read primary variable current and dynamic variables

Command format:

Read the current of primary variable and 4 preset dynamic variables at maximum. The current of primary variable always match the AO output current of the instrument. Every type of device has a definition on a relative dynamic variable, for example the secondary variable is temperature sensor.

Request: None

Response:

Byte 0-3: Analog output current mA, IEEE 754

Byte 4: Primary variable unit code

Byte 5-8: Primary variable, IEEE 754

Byte 9: Secondary variable unit code

Byte 10-13: Secondary variable, IEEE 754

Byte 14: Tertiary variable unit code

Byte 15-18: Tertiary variable, IEEE 754

Byte 19: Quaternary variable unit code

Byte 20-23: Quaternary variable, IEEE 754

Remark: Primary variable is flow rate. The unit code is 75:kg/hour, 19:m3/hour;

Secondary variable is total flow. The unit code is 61:kg, 43:m3;

Tertiary variable is frequency. The unit is Hz;

Quaternary variable is temperature. The unit is 32: ℃;

Test of command:

Send command 3: FF FF FF FF FF 82 9A 1A AD 18 8C 03 00 38; to read dynamic variables

Receive command 3: FF FF FF FF FF 86 9A 1A AD 18 8C 03 1A 00 00 40 80 00 00 13 00 00 00 00 2B 48 33 5A 4B 26 00 00 00 00 20 00 00 00 00 B2

10.1.5 Command 6: Write polling address

Command format:

It is a date link management command. This command writes a polling address to the device. This address is used to control the AO of primary variable and providing of device ID.

Only when the polling address of the instrument is 0, that the AO output of primary variable is available. If the address is 1~15, AO will be not activated and will not response, AO will be minimum value; transmission status will be the 3rd statue------primary variable AO fixed; max and min alarm not implemented. If polling address is write back to 0, AO will be activated again and will response.

Request:

Byte 0: Device polling address

Response:

Byte 0: Device polling address

Test of command:

Send command 6: FF FF FF FF FF 82 9A 1A AD 18 8C 06 01 00 3C ; to write POLLING ADDRESS

Receive command 6:FF FF FF FF FF 86 9A 1A AD 18 8C 06 03 00 00 00 3A

10.1.6 Command 11: Read unique identifier associated with tag

Command format:

It is a date link management command. This command will return the device type, revision level and device identification number of the device which matches to the tag. Process the command upon receipt of the expansion address or broadcast address. The expansion addresses in command and response are the same.
Request:

Byte 0-5: Tag, Packed ASCI

Response:

Byte 0: Device type code for expansion

Byte 1: Manufacture Identification code

Byte 2: Manufacture device type

Byte 3: Number of request preambles

Byte 4: Revision level of universal command

Byte 5: Revision level of transmitter document

Byte 6: Software revision level

Byte 7: Hardware revision level

Byte 8: Flags, none defined at this time.

Byte 9-11: Device identification number

Test of command:

Send command 11: FF FF FF FF FF 82 9A 1A AD 18 8C 0B 00 30 ; Read relevant info of the device such as unique identifier associated with tag

Receive command 11: FF FF FF FF FF 86 9A 1A AD 18 8C 0B 0E 00 00 FE 1A 1A 05 05 00 00 00 00 AD 18 8C FD

10.1.7 Command 12: Read message

Command format:

To read message

Request: None

Response:

Byte 0-23: Message

Test of command:

Send command 12:FF FF FF FF FF 82 9A 1A AD 18 8C 0C 00 37 ; read message

Receive command 12:FF FF FF FF FF 86 9A 1A AD 18 8C 0C 1A 00 00 59 00 74 D6 05 8F 49 41 58 80 42 47 25 40 4C 81 04 8F 0C 54 D3 3D 28 20 10

10.1.8 Command 13: Read tag, descriptor, date

Command format:

Read device tag, description and date.

Request: None

Response:

Byte 0-5: Tag, ASCII

Byte 6-17: Descriptor, ASCII

Byte 18-20: Date: day, month, year

Test of command:

Send command 13:FF FF FF FF FF 82 9A 1A AD 18 8C 0D 00 36 ;read device tag, descriptor and date

Receive command 13:FF FF FF FF FF 86 9A 1A AD 18 8C 0D 17 00 00 50 11 E0 82 08 20 58 F4 94 15 88 06 30 F5 CD 15 41 52 0F 01 6F E2

10.1.9 Command 14: Read primary variable sensor information: device serial number and limits

Command format:

Read device information

Request: None

Response:

Byte 0-2: Sensor serial number MSB, 24-BIT unsigned integer

Byte 3: Flow rate unit

Byte 4-7: Upper sensor limit of flow rate

Byte 8-11: Lower sensor limit of flow rate

Byte 12-15: Minimum span of flow rate

Test of command:

Send command 14: FF FF FF FF FF 82 9A 1A AD 18 8C 0E 00 35; to read primary sensor serial number and limits.

Receive command 14: FF FF FF FF FF 86 9A 1A AD 18 8C 0E 12 00 00 00 00 00 13 43 96 00 00 00 00 00 00 38 D1 B7 17 AC

10.1.10 Command 15: Read primary variable output information

Command format:

Read Primary variable alarm select code, primary variable transfer code, primary variable range values units code, primary variable upper and lower range value, primary variable damping value, write protect code and private label distributor code VIII

Request: None

Response:

Byte0: Alarm select code

Byte1: Primary variable transfer function code

Byte2: Primary variable range values unit code

Byte3-6: Primary variable upper range value, IEEE754

Byte7-10: Primary variable lower range value, IEEE754

Byte11-14: Primary variable damping value, IEEE754,units of seconds

Byte15: Write protect code

Byte16: Private Label Distributor Code

Test of command:

Send command 15:FF FF FF FF FF 82 9A 1A AD 18 8C 0F 00 34; Read primary variable output information

Receive command 15:FF FF FF FF FF 86 9A 1A AD 18 8C 0F 13 00 00 00 00 13 43 96 00 00 00 00 00 00 42 20 00 00 FB 12 6E

10.1.11 Command 16: Read final assembly number

Command format:

Read final assembly number.

Request: None

Response:

Byte 0-2: Final assembly number

Test of command:

Send command 16:FF FF FF FF FF 82 9A 1A AD 18 8C 10 00 2B; Read final assembly number

Receive command 16: FF FF FF FF FF 86 9A 1A AD 18 8C 10 05 00 00 A8 36 81 35

10.1.12 Command 17: Write message

Command format:

Write message

Request:

Byte 0-23: Message

Response:

Byte 0-23: Message

Test of command:

Send command 17:FF FF FF FF FF 82 9A 1A AD 18 8C 11 18 00 01 02 03 04 05 06 07 08 09 0A 0B 0C 0D 0E 0F 10 11 12 13 14 15 16 17 32 ;message

Receive command 17:FF FF FF FF FF 86 9A 1A AD 18 8C 11 1A 00 00 00 01 02 03 04 05 06 07 08 09 0A 0B 0C 0D 0E 0F 10 11 12 13 14 15 16 17 34

10.1.13 Command 18: Write tag, descriptor, date

Command format:

Write tag, descriptor, date.

Request:

Byte 0-5: Tag, ASCII

Byte 6-17: Descriptor, ASCII

Byte 18-20: Date: day, month, year

Response:

Byte 0-5: Tag, ASCII

Byte 6-17: Descriptor, ASCII

Byte 18-20: Date: day, month, year

Test of command:

Send command 18: FF FF FF FF FF 82 9A 1A AD 18 8C 12 15 00 00 00 00 00 00 00 00 00 00 00 00 00 00 00 00 00 00 00 00 00 00 3C

Receive command 18:FF FF FF FF FF FF 86 9A 1A AD 18 8C 12 17 00 00 00 00 00 00 00 00 00 00 00 00 00 00 00 00 00 00 00 00 00 00 3A

10.1.14 Command 19: Write final assembly number

Command format:

Write final assembly number

Request:

Byte 0-2: Final assembly number

Response:

Byte 0-2: Final assembly number

Test of command:

Send command 19: FF FF FF FF FF 82 9A 1A AD 18 8C 13 03 01 02 03 2B ;

Receive command 19: FF FF FF FF FF 86 9A 1A AD 18 8C 13 05 00 00 01 02 03 29

10.1.15 Command 34: Write primary variable damping value

Command format:

Write primary variable damping value. If value is not acceptable, will revert with alarm.

Request:

Byte 0-3: Damping value, IEEE754

Response:

Byte 0-3: Actual damping value, IEEE754

Test of command:

Send command 34: FF FF FF FF FF 82 9A 1A AD 18 8C 22 04 40 00 00 00 5D; Write primary variable damping value

Receive command 34: FF FF FF FF FF 86 9A 1A AD 18 8C 22 06 00 00 40 00 00 00 5B

10.1.16 Command 35: Write primary variable range values

Command format:

The upper and lower limits of primary variable are independent. The primary variable range unit value that this command received has no effect on the primary variable unit value. The primary value range value will be returned in the unit received.

Most device allows that the measurement range upper limit lower than lower limit ,to support the device to reverse output.

Request:

Byte 0: Primary variable upper and lower range value unit code

Byte 1-4: Primary variable upper range limit, IEEE 754

Byte 5-8: Primary variable lower range limit, IEEE 754

Response:

Byte 0: Primary variable upper and lower range value unit code

Byte 1-4: Primary variable upper range limit, IEEE 754

Byte 5-8: Primary variable lower range limit, IEEE 754

Test of command:

Send command 35: FF FF FF FF FF 82 9A 1A AD 18 8C 23 09 13 40 00 00 00 40 00 00 00 02;

Write primary variable range values

Receive command 35: FF FF FF FF FF 86 9A 1A AD 18 8C 23 0B 00 00 13 00 00 00 00 00 00 00 00 04

10.1.17 Command 36: Write primary variable upper limit value

Command format:

Write the primary variable upper limit to current primary variable value. The change of primary

variable upper limit value has no effect on the primary variable lower limit.

Request:

NONE

Response:

NONE

Test of command:

Send command 36: FF FF FF FF FF 82 9A 1A AD 18 8C 24 00 1F; Write the primary variable upper limit to current primary variable value.

Receive command 36: FF FF FF FF FF 86 9A 1A AD 18 8C 24 02 00 00 19

10.1.18 Command 37: Write primary variable lower limit value

Command format:

Write the primary variable lower limit to current primary variable value. The change of primary variable lower limit value has no effect on the primary variable higher limit.

Request:

NONE

Response:

NONE

Test of command:

Send command 37: FF FF FF FF FF 82 9A 1A AD 18 8C 25 00 1E; Write the primary variable lower limit to current primary variable value.

Receive command 37: FF FF FF FF FF 86 9A 1A AD 18 8C 25 02 00 00 18

10.1.19 Command 40: Enter/Exit primary variable current mode

Command format:

Device is set to fixed primary variable current, when primary variable is 0, means to exit primary variable current mode.

Request:

Byte 0-3: Fixed primary variable current level IEEE 754, mA

Response:

Byte 0-3: Actual fixed primary variable current level IEEE 754, mA

Test of command:

Send command 40: FF FF FF FF FF 82 9A 1A AD 18 8C 28 04 40 80 00 00 D7

Receive command 40: FF FF FF FF FF 86 9A 1A AD 18 8C 28 06 00 00 40 80 00 00 D1

10.1.20 Command 45: Trim primary variable current DAC zero

Command format:

Trim the primary variable current AO zero, so the current current value is accurate set to its min value.

Before implementing this command, use command 40 to set current to accurate primary variable AO min value. If device is not under fixed primary variable current mode or current has not been set to accurate min value, need to return response code 9---not under correct current mode.

Request:

Byte 0-3: Externally measured primary variable current level IEEE754, units of mA

Response:

Byte 0-3: Actual measured primary variable current level IEE 754

Test of command:

Send command 45: FF FF FF FF FF 82 9A 1A AD 18 8C 2 D 04 40 80 00 00 D2

Receive command 45: FF FF FF FF FF 86 9A 1A AD 18 8C 2D 06 09 00 40 80 00 00 DD : response code is 09, device is not under correct current mode.

10.1.21 Command 46: Trim primary variable current DAC gain

Command format:

Trim primary variable AO gain, so the current current value is accurate set to its max value.

Before implementing this command, use command 40 to set current to accurate primary variable AO max value. If device is not under fixed primary variable current mode or current has not been set to accurate max value, need to return response code 9---not under correct current mode.

Request:

Byte 0-3: Externally measured primary variable current level IEEE754, units of mA

Response:

Byte 0-3: Actual measured primary variable current level IEE 754

Test of command:

Send command 46: FF FF FF FF FF 82 9A 1A AD 18 8C 2 E 04 40 80 00 00 D1

Receive command 46: FF FF FF FF FF 86 9A 1A AD 18 8C 2E 06 09 00 40 80 00 00 DE : response code is 09, device is not under correct current mode.

10.1.22 Command 140: Reset totalizer

Command format:

Reset totalizer

Request:

NONE

Response:

NONE

Test of command:

Send command 140: FF FF FF FF FF 82 9A 1A AD 18 8C 8C 00 B7 Reset totalizer

Receive command 140: FF FF FF FF FF 86 9A 1A AD 18 8C 8C 02 00 00 B1

11. Maintaining

11.1 How to reverse the transmitter front and back

1) The transmitter can be reversed to front and back.

2) Before reverse the transmitter, please take out the tightening screw under the transmitter.

3) Reverse the transmitter by 180 degrees, then screw and tighten the tightening screw.

Please reference to picture 11.1

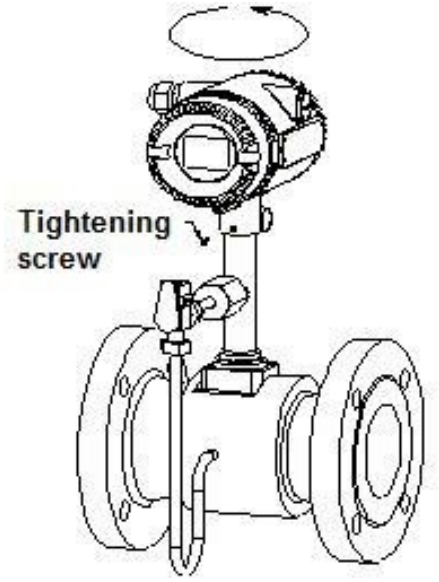

Picture 11.1: Reverse the transmitter front and back

11.2 Replace a transmitter circuit boards

1) Please make sure the power is off before replacing the transmitter.

2) Remove the front cover.

3) Loose the 4 screws on the circuit boards, than can take the boards out a little.

4) Remove all the plugs on the circuit board. Then remove the circuit board away

5) Put the new circuit board in and put the plug on

6) Tighten the 4 screws on the board, tighten the front cover

Please reference to picture 11.2

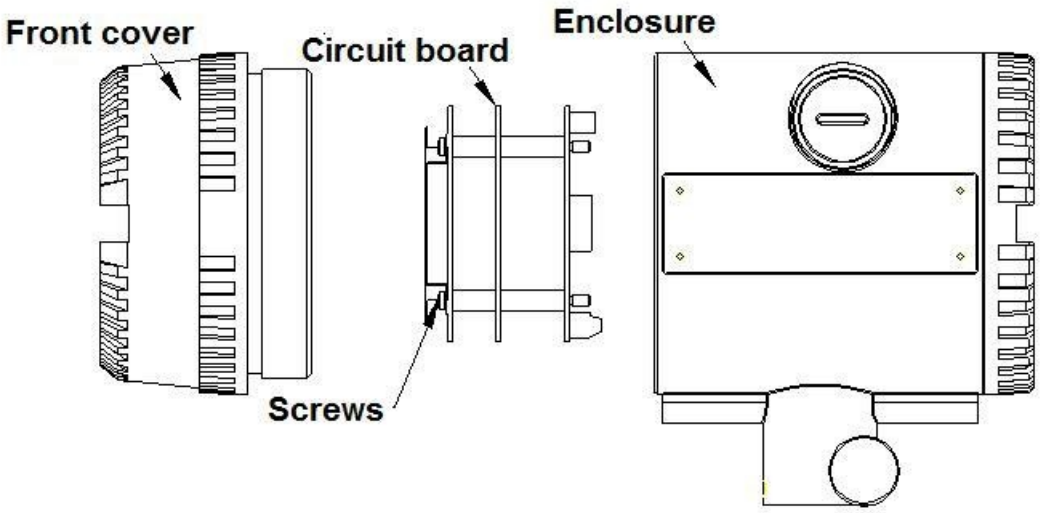

Picture 11.2: Replace the transmitter

12. Troubleshooting and repair

12.1 Safety introduction

- **Please do not open the cover on the flame proof enclosure if in a explosive environment.**
- **When trying to wire to HART or RS485 device, please make sure that the process of wiring the device into the loop complies with the intrinsic safety requirement. Or please process the wiring in a none-explosive environment.**
- **Please make sure the environment the flowmeter in can meet the requirement of the certificate.**
- **When power is wired, please make sure the front and rear cover is closed properly.**

12.2 Troubleshooting and repair

Symptom	Reason	Trouble shooting	Repair	
No display	Power supply failure	Test the voltage on the power source with a universal meter	Re-wire the power or use a new power	
	Power is not wired	Test the voltage on the power source with a universal meter	Wire the power	
	Cable if broken	Check if there is break off point on the cable	Check the cable and re-wire	
	Wrong wiring	Check if wiring to the correct terminal	Re-wire	

Displayed flow rate is 0 while there are flow in the pipe	Flow rate is lower than the meter's lower limit	Increase the flow rate to check	Increase the flow rate or replace a new proper flowmeter	
	The flow rate of small signal cut off function is too high	Check the small signal cut off setting	Set the small signal cut off to a proper value	
	Energy threshold value is too high	Check if the Energy threshold value is too high in spectrum analyzing checking mode	Set the Energy threshold value to a proper value (Please reference to Note 1 for how to set)	
	Transmitter function failure	Replace the transmitter with another transmitter of same type to check	Replace the transmitter	
	Sensor is damaged	Increase the flow rate to check first, than install the transmitter to another flowmeter in same type to check.	Replace the sensor	
	Pipeline blocked or sensor jam.	If all above possibilities are eliminated, please check the pipe line and installation.	Re-install the flowmeter	
There is big difference between the flow reading and the process flow rate	No density compensation for steam measurement	Check the density compensation devices and the setting	Fix density compensation	
	The estimated flow rate before using the meter is wrong	Use other flowmeter to confirm the actual flow rate		
	Setting incorrect	Check the settings of meter K factor,upper and lower limit of flow rate	Set the meter correctly	

Note 1: Enter code setting, set C49=12. Press “U-D button” to check the current energy of vortex flow signal and vibration signal. E1 is the energy of vortex flow signal, please set the energy threshold value lower than the displayed value. E.1 is the energy of vibration, please set the energy threshold value lower than the displayed value. Set above value in D017 (Energy threshold of vortex flow signal) and D018 (Energy threshold of vibration), than set C49 back to 00.

12.3 Self-diagnose function

VFM60 digital vortex flowmeter display can also indicate the self-diagnose code as below :

Error code	Problem	Repair
Err-003	Temperature sensor disconnected	Check Temperature sensor
Err-004	Pressure sensor disconnected	Check pressure sensor
Err-005	About to over total flow	This is a reminding message
Err-006	Display value over limit	The value is over the physical limit of the display
Err-011	Superheated steam temperature is over limit	Reduce the steam temperature

Err-012	Superheated steam pressure is over limit	Reduce the steam pressure
Err-013	Button is pressed and hold for too long time	Check the button circuit
Err-014	Reset code setting failed	Check EEPROM
Err-015	Reset digital setting failed	Check EEPROM
Err-016	Read total flow error	Check EEPROM
Err-017	Temperature calibration setting is wrong	Check the record of temperature calibration
Err-018	pressure calibration setting is wrong	Check the record of pressure calibration
Err-020	Flow rate limit setting is incorrect	Check the flow rate limit setting
Err-021	Temperature limit setting is incorrect	Check the temperature limit setting
Err-022	Pressure limit setting is incorrect	Check the pressure limit setting
Err-023	Communication connection error	Check the communication li
Err-024	Setting is incorrect when using aga_nx_19 to calculate the compressibility factor	Check if the setting for compressibility factor is correct
Err-025	Frequency output for total flow is over limit	Reset the total flow frequency output factor
Err-026	3V power source failure	Check the circuit board
Err-027	Frequency output incorrect	Check the range of frequency
Err-028	The master is disconnected from the slave	Check the cable wiring between local and remote transmitter

13. Remark

No part of this publication may be copied or distributed, transmitted, transcribed, stored in a retrieval system, or translated into any human or computer language, in any form or by any means, electronic, mechanical, manual, or other wise, or disclosed to third parties without the express written permission of Comate Intelligent Sensor Technology. The information contained in this manual is subject to change without notice.

Appendix

Specification:

- **Accuracy**

Variables	For gas and steam	Liquid
Flow rate (m3/h)	±1% RD (Re ≥ 20000)	±0.75% RD (Re ≥ 20000)
	±2% RD (10000 < Re < 20000)	±2% RD (10000 < Re < 20000)
Mass flow (kg/h)	±1.5% RD (Re ≥ 20000)	±1.0% RD (Re ≥ 20000)
	±2.5% RD (10000 < Re < 20000)	±2.5% RD (10000 < Re < 20000)
Temperature (℃) (For multi-variable version)	±1℃	±1℃

Pressure (Mpa) (For multi-variable version)	±0.75% FS	±0.75% FS

- **Repeatability**

Flow rate	±0.3%
Mass flow	±0.3%
Temperature	±0.05 ℃
Pressure	±0.05% FS

- **Measurement range**

Fluid type	Lower limit	Higher limit	Condition
Gas	6m/s , DN15、DN20	60m/s	T=25℃ , P=101.325Kpa Air calibrated
	4m/s , DN25、DN32		
	2m/s , DN40~DN300		
Steam	6m/s , DN15、DN20	70m/s	T=25℃ , P=101.325Kpa Air calibrated
	4m/s , DN25、DN32		
	2m/s , DN40~DN300		
Liquid	0.3m/s	7m/s	T=25℃ , P=101.325Kpa Water calibrated

- **Temperature range**

Low temperature version	−180℃~100℃
Normal temperature version	−40℃~150℃
Medium temperature version	−40℃~250℃
High temperature version	−40℃~350℃

- **Pressure range**

Available pressure rating includes 1.6Mpa, 2.5Mpa, 4.0Mpa, 6.4Mpa. If the application requires a higher pressure rating , please contact us to check the possibility.

Size and dimension

Size and dimension for wafer type

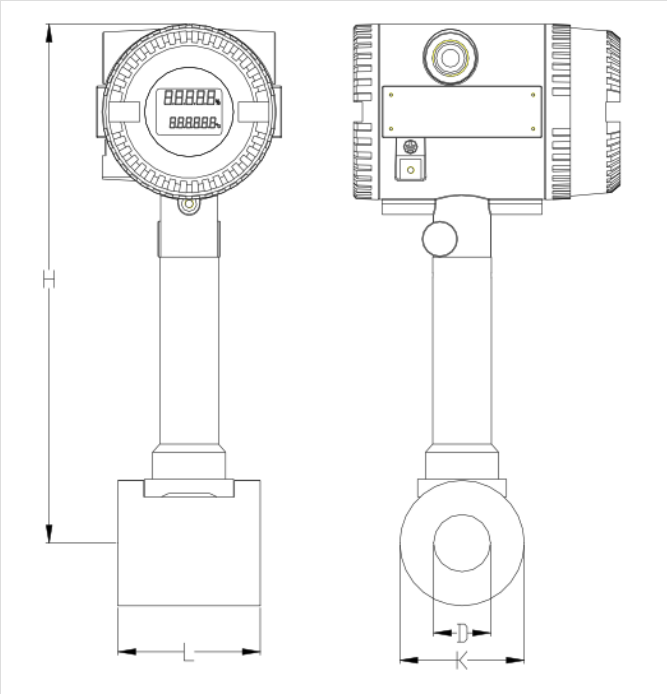

SVF128Wafer type 150 dgrC version

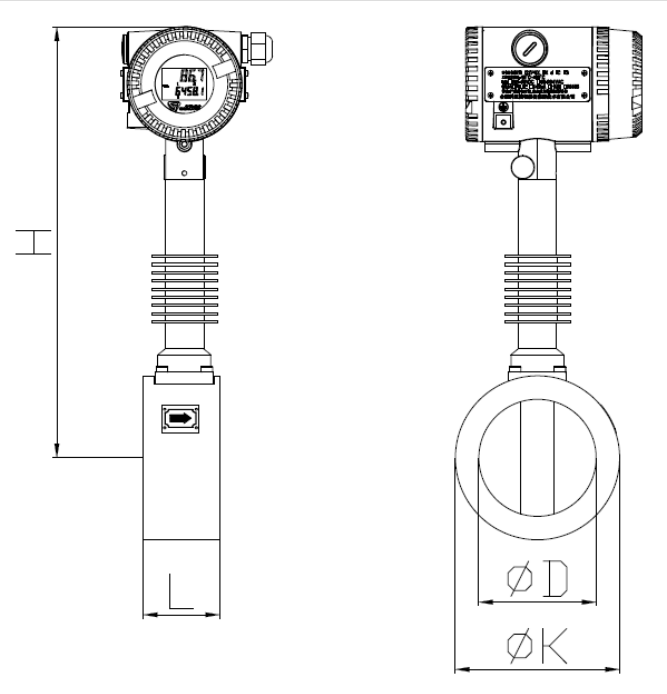

SVF128 Wafer type 250/350 dgrC version

Size	K (Pipe O/D)	L (Pipe length)	W (Flange screwhole distance)	C (flange thickness)	m (screwhole diameter)	n (screw qty)	H (Meter height) 150dgrC	H (Meter height) 250dgrC	H (Meter height) 350dgrC	Flange O/D
15	75	65	100	18	14	4	294	335	475	130
20	75	65	100	18	14	4	294	335	475	130
25	75	65	100	18	14	4	288.5	329.5	469.5	130
32	80	65	120	20	14	4	292.8	333.8	473.8	145
40	84	65	120	20	14	4	295.8	336.8	476.8	145
50	94	65	132	22	18	4	301	342	482	160
65	105	65	144	24	18	6	308.5	349.5	489.5	180
80	120	65	160	24	18	6	316	357	497	192
100	140	90	190	24	18	8	327	368	508	230
125	165	65	210	26	18	8	340.5	381.5	521.5	242
150	190	65	240	28	22	8	353	534	534	280
200	240	85	296	28	22	12	378	559	559	335
250	290	100	354	28	22	12	404	585	585	405
300	340	120	412	30	22	12	429	609	609	460

Remark: The flange O/D, screw holes distance, flange thickness, screw hole diameter and screw qty are for the counter flanges, unit in mm.

Counter flanges, screw and bolts, gaskets are usually along with package.

Size and dimension for flanged type

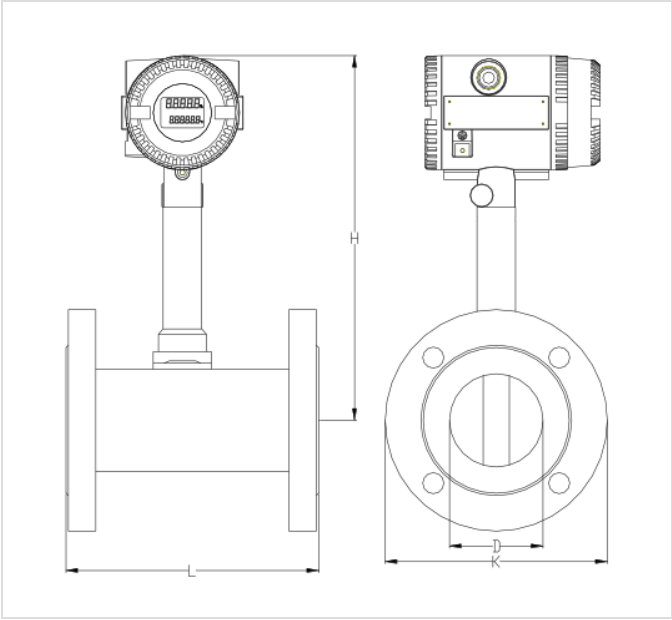

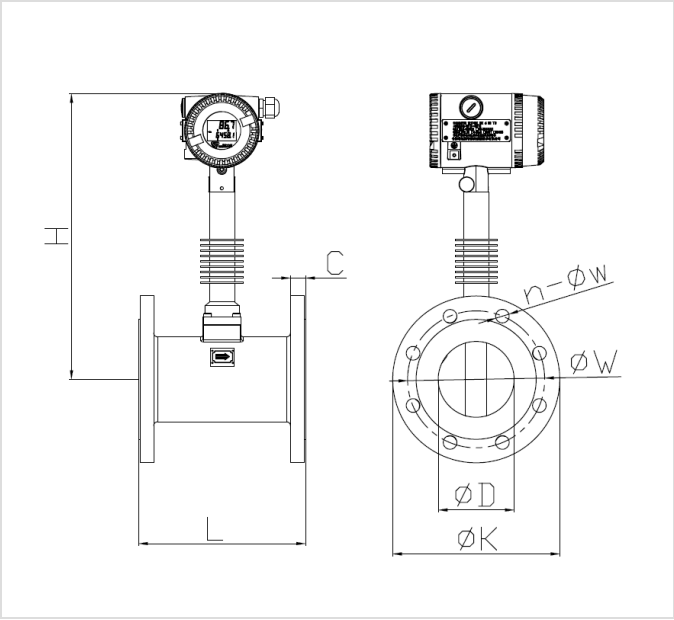

SVF128 Flanged type 150 dgrC version					SVF128 Flanged type 250/350 dgrC version				
Size	K (Flange O/D)	L (Pipe length)	W (Flange screwhole distance)	C (flange thickness)	m (screwhole diameter)	n (screw qty)	H (Meter height) 150dgrC	H (Meter height) 250dgrC	H (Meter height) 350dgrC
15	90	180	60.3	11.6	15.9	4	294	335	475
20	100	180	69.9	13.2	15.9	4	294	335	475
25	110	180	79.4	14.7	15.9	4	293	334	474
32	117.3	180	88.9	16.3	15.9	4	300.5	341.5	481.5
40	127	180	98.4	17.9	15.9	4	302.5	343.5	483.5
50	152.4	180	120.7	19.5	19	4	307	348	488
65	180	200	139.7	22.7	19	4	314	355	495
80	190.5	200	152.4	24.3	19	4	326	367	507
100	230	200	190.5	24.3	19	8	336	377	517
125	255	220	215.9	24.3	22.2	8	345	386	526
150	280	220	241.3	25.9	22.2	8	360	541	541
200	345	220	298.5	29	22.2	8	385	586	586
250	405	250	362	30.6	25.4	12	412.7	593.7	593.7
300	485	300	431.8	32.2	25.4	12	445.4	626.4	626.4

Dimension of ANSI CL150 flanged version

Size	K (Flange O/D)	L (Pipe length)	W (Flange screwhole distance)	C (flange thickness)	m (screwhole diameter)	n (screw qty)	H (Meter height) 150dgrC	H (Meter height) 250dgrC	H (Meter height) 350dgrC
15	95.2	180	66.7	14.7	15.9	4	294	335	475
20	117.5	180	82.6	16.3	19	4	294	335	475
25	125	180	88.9	17.9	19	4	293	334	474
32	135	180	98.4	19.5	19	4	300.5	341.5	481.5
40	156	180	114.3	21.1	22.2	4	302.5	343.5	483.5
50	165.1	180	127	22.7	19	8	307	348	488
65	191	200	149.2	25.9	22.2	8	314	355	495
80	210	200	168.3	29	22.2	8	326	367	507
100	255	200	200	32.2	22.2	8	336	377	517
125	280	220	235	35.4	22.2	8	345	386	526
150	320	220	269.9	37	22.2	12	360	541	541
200	381	220	330.2	41.7	25.4	12	385	586	586

250	455	250	387.4	48.1	28.6	16	412.7	593.7	593.7
300	521	300	450.8	51.3	31.7	16	445.4	626.4	626.4

Dimension of ANSI CL300 flanged version

Size	K (Flange O/D)	L (Pipe length)	W (Flange screwhole distance)	C (flange thickness)	m (screwhole diameter)	n (screw qty)	H (Meter height) 150dgrC	H (Meter height) 250dgrC	H (Meter height) 350dgrC
15	95	180	65	14	14	4	294	335	475
20	105	180	75	16	14	4	294	335	475
25	115	180	85	16	14	4	293	334	474
32	140	180	100	18	18	4	300.5	341.5	481.5
40	150	180	110	18	18	4	302.5	343.5	483.5
50	165	180	125	20	18	4	307	348	488
65	185	200	145	20	18	8	314	355	495
80	200	200	160	20	18	8	326	367	507
100	220	200	180	22	18	8	336	377	517
125	250	220	210	22	18	8	345	386	526
150	285	220	240	24	22	8	360	541	541
200	340	220	295	26	22	12	385	586	586
250	405	250	355	29	26	12	412.7	593.7	593.7
300	460	300	410	32	26	12	445.4	626.4	626.4

Dimension of DIN PN16 flanged version

Size	K (Flange O/D)	L (Pipe length)	W (Flange screwhole distance)	C (flange thickness)	m (screwhole diameter)	n (screw qty)	H (Meter height) 150dgrC	H (Meter height) 250dgrC	H (Meter height) 350dgrC
15	95	180	65	14	14	4	294	335	475
20	105	180	75	16	14	4	294	335	475
25	115	180	85	16	14	4	293	334	474
32	140	180	100	18	18	4	300.5	341.5	481.5
40	150	180	110	18	18	4	302.5	343.5	483.5
50	165	180	125	20	18	4	307	348	488
65	185	200	145	22	18	8	314	355	495
80	200	200	160	24	18	8	326	367	507
100	235	200	190	26	22	8	336	377	517
125	270	220	220	28	26	8	345	386	526
150	300	220	250	30	26	8	360	541	541
200	360	220	310	32	26	12	385	586	586
250	425	250	370	35	30	12	412.7	593.7	593.7
300	485	300	430	38	30	16	445.4	626.4	626.4

Dimension of DIN PN25 flanged version

Size	K (Flange O/D)	L (Pipe length)	W (Flange screwhole distance)	C (flange thickness)	m (screwhole diameter)	n (screw qty)	H (Meter height) 150dgrC	H (Meter height) 250dgrC	H (Meter height) 350dgrC
15	95	180	65	14	14	4	294	335	475

20	105	180	75	16	14	4	294	335	475
25	115	180	85	16	14	4	293	334	474
32	140	180	100	18	18	4	300.5	341.5	481.5
40	150	180	110	18	18	4	302.5	343.5	483.5
50	165	180	125	20	18	4	307	348	488
65	185	200	145	22	18	8	314	355	495
80	200	200	160	24	18	8	326	367	507
100	235	200	190	26	22	8	336	377	517
125	270	220	220	28	26	8	345	386	526
150	300	220	250	30	26	8	360	541	541
200	375	220	320	36	30	12	385	586	586
250	450	250	385	42	33	12	412.7	593.7	593.7
300	515	300	450	52	33	16	445.4	626.4	626.4

Dimension of DIN PN40 flanged version

Size	K (Flange O/D)	L (Pipe length)	W (Flange screwhole distance)	C (flange thickness)	m (screwhole diameter)	n (screw qty)	H (Meter height) 150dgrC	H (Meter height) 250dgrC	H (Meter height) 350dgrC
15	95	180	70	12	15	4	294	335	475
20	100	180	75	14	15	4	294	335	475
25	125	180	90	14	19	4	293	334	474
32	135	180	100	16	19	4	300.5	341.5	481.5
40	140	180	105	16	19	4	302.5	343.5	483.5
50	155	180	120	16	19	4	307	348	488
65	175	200	140	18	19	4	314	355	495
80	185	200	150	18	19	8	326	367	507
100	210	200	175	18	19	8	336	377	517
125	250	220	210	20	23	8	345	386	526
150	280	220	240	22	23	8	360	541	541
200	330	220	290	22	23	12	385	586	586
250	400	250	355	24	25	12	412.7	593.7	593.7
300	445	300	400	24	25	16	445.4	626.4	626.4

Dimension of JIS 10K flanged version

Size	K (Flange O/D)	L (Pipe length)	W (Flange screwhole distance)	C (flange thickness)	m (screwhole diameter)	n (screw qty)	H (Meter height) 150dgrC	H (Meter height) 250dgrC	H (Meter height) 350dgrC
15	95	180	70	14	15	4	294	335	475
20	100	180	75	16	15	4	294	335	475
25	125	180	90	16	19	4	293	334	474
32	135	180	100	18	19	4	300.5	341.5	481.5
40	140	180	105	18	19	4	302.5	343.5	483.5
50	155	180	120	18	19	8	307	348	488
65	175	200	140	20	19	8	314	355	495
80	200	200	160	22	23	8	326	367	507
100	225	200	185	24	23	8	336	377	517
125	270	220	225	26	25	8	345	386	526

150	305	220	260	28	25	12	360	541	541
200	350	220	305	30	25	12	385	586	586
250	430	250	380	34	27	12	412.7	593.7	593.7
300	480	300	430	36	27	16	445.4	626.4	626.4

Dimension of JIS 20K flanged version

Remark: Flanged version do not contains screws and bolts in the package unless customer need to purchase from us. We also have flanged type in other standard and pressure rating. Please check with us if you require flanged version other than what we provided

Size and dimension for multi-variable wafer type

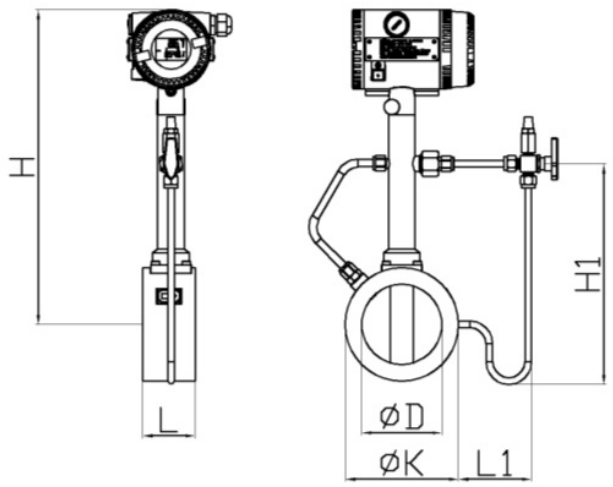

SVF128 Wafer type 150 dgrC version

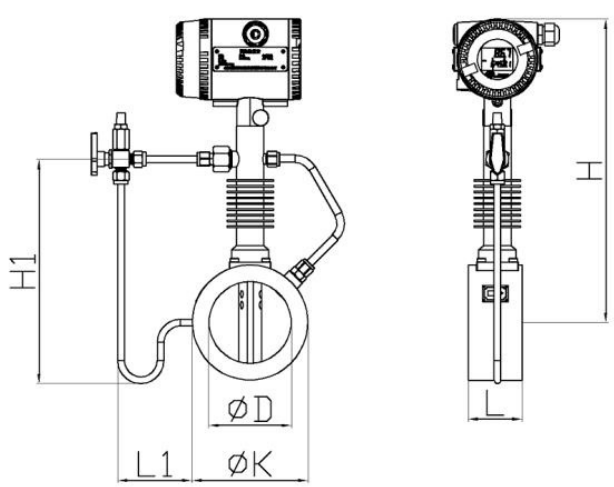

SVF128 Wafer type 250/350 dgrC version

Size	K (Flange O/D)	L (Pipe length)	W (Flange screwhole distance)	C (flange thickness)	m (screwhole diameter)	n (screw qty)	L1 (Condensation pipe length)
15	75	65	100	18	14	4	86
20	75	65	100	18	14	4	83.5
25	75	65	100	18	14	4	86
32	80	65	120	20	14	4	87
40	84	65	120	20	14	4	89
50	94	65	132	22	18	4	89
65	105	65	144	24	18	6	91
80	120	65	160	24	18	6	111
100	140	90	190	24	18	8	90
125	165	65	210	26	18	8	86
150	190	65	240	28	22	8	86
200	240	85	296	28	22	12	106
250	290	100	354	28	22	12	106
300	340	120	412	30	22	12	106

H (Meter height) 150dgrC	H1 (Condensation pipe height 150 dgrC)	H (Meter height) 250dgrC	H1 (Condensation pipe height 250 dgrC)	H (Meter height) 350dgrC	H1 (Condensation pipe height 350 dgrC)
294	183	335	234	475	374

294	183	335	234	475	374
228.5	177.5	329.5	228.5	469.5	368.5
292.8	181.8	333.8	232.8	473.8	372.8
295.8	184.8	336.8	235.8	476.8	375.8
310	190	342	241	482	381
308.5	197.5	349.5	248.5	489.5	388.5
316	247.5	357	298.5	497	438.5
327	221	368	272	508	412
340.5	239.5	381.5	290.5	521.5	430.5
353	267	534	458	534	458
378	317	559	508	559	508
404	368	585	559	585	559
429	418	609	609	609	609

Size and dimension for multi-variable flanged type

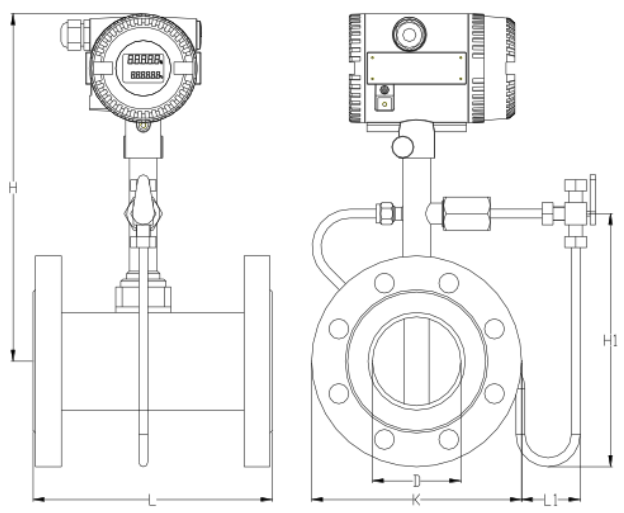

SVF128 Flanged type 150 dgrC version

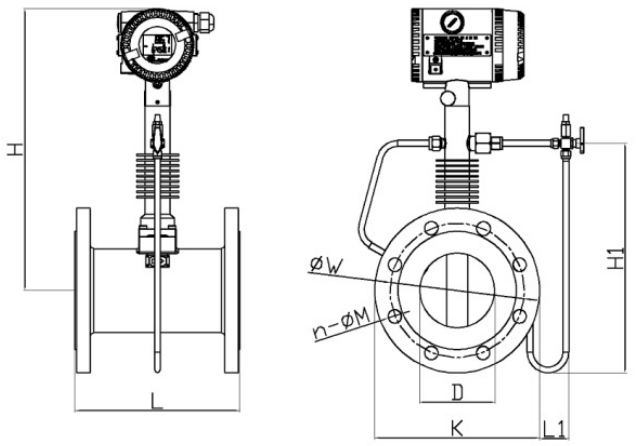

SVF128 Flanged type 250/350 dgrC version

Size	K (Flange O/D)	L (Pipe length)	W (Flange screwhole distance)	C (flange thickness)	m (screwhole diameter)	n (screw qty)	L1 (Condensation pipe length)
15	95	180	65	14	14	4	76
20	105	180	75	16	14	4	68.5

25	115	180	85	16	14	4	66
32	140	180	100	18	18	4	57
40	150	180	110	18	18	4	56
50	165	180	125	20	18	4	53.5
65	185	200	145	20	18	8	51
80	200	200	160	20	18	8	51
100	220	200	180	22	18	8	50
125	250	220	210	22	18	8	43.5
150	285	220	240	24	22	8	38.5
200	340	220	295	26	22	12	56
250	405	250	355	29	26	12	48.5
300	460	300	410	32	26	12	46

H (Meter height) 150dgrC	H1 (Condensation pipe height 150 dgrC)	H (Meter height) 250dgrC	H1 (Condensation pipe height 250 dgrC)	H (Meter height) 350dgrC	H1 (Condensation pipe height 350 dgrC)
294	183	335	234	475	374
294	183	335	234	475	374
293	186	334	237	474	377
300.5	193.5	341.5	244.5	481.5	384.5
302.5	195.5	343.5	246.5	483.5	386.5
307	200	348	251	488	391
314	207	355	258	495	398
326	219	367	270	507	410
336	234	377	285	517	425
345	248	386	299	526	439
360	278	541	469	541	469
385	328	566	519	566	519
412.7	380.7	593.7	571.7	593.7	571.7
445.4	438.4	626.4	629.4	626.4	629.4

Dimension of DIN PN16 flanged version

Size	K (Flange O/D)	L (Pipe length)	W (Flange screwhole distance)	C (flange thickness)	m (screwhole diameter)	n (screw qty)	L1 (Condensation pipe length)
15	95	180	65	14	14	4	76
20	105	180	75	16	14	4	68.5
25	115	180	85	16	14	4	66
32	140	180	100	18	18	4	57

40	150	180	110	18	18	4	56
50	165	180	125	20	18	4	53.5
65	185	200	145	22	18	8	51
80	200	200	160	24	18	8	51
100	235	200	190	26	22	8	32.5
125	270	220	220	28	26	8	33.5
150	300	220	250	30	26	8	31
200	360	220	310	32	26	12	46
250	425	250	370	35	30	12	38.5
300	485	300	430	38	30	16	33.5

H (Meter height) 150dgrC	H1 (Condensation pipe height 150 dgrC)	H (Meter height) 250dgrC	H1 (Condensation pipe height 250 dgrC)	H (Meter height) 350dgrC	H1 (Condensation pipe height 350 dgrC)
294	183	335	234	475	374
294	183	335	234	475	374
293	186	334	237	474	377
300.5	193.5	341.5	244.5	481.5	384.5
302.5	195.5	343.5	246.5	483.5	386.5
307	200	348	251	488	391
314	207	355	258	495	398
326	219	367	270	507	410
336	234	377	285	517	425
345	248	386	299	526	439
360	278	541	469	541	469
385	328	566	519	566	519
412.7	380.7	593.7	571.7	593.7	571.7
445.4	438.4	626.4	629.4	626.4	629.4

Dimension of DIN PN25 flanged version

Size	K (Flange O/D)	L (Pipe length)	W (Flange screwhole distance)	C (flange thickness)	m (screwhole diameter)	n (screw qty)	L1 (Condensation pipe length)
15	95	180	65	14	14	4	76
20	105	180	75	16	14	4	68.5
25	115	180	85	16	14	4	66
32	140	180	100	18	18	4	57
40	150	180	110	18	18	4	56
50	165	180	125	20	18	4	53.5
65	185	200	145	22	18	8	51
80	200	200	160	24	18	8	51
100	235	200	190	26	22	8	32.5
125	270	220	220	28	26	8	33.5
150	300	220	250	30	26	8	31
200	375	220	320	36	30	12	39.5
250	450	250	385	42	33	12	36
300	515	300	430	52	33	16	18.5

H (Meter height) 150dgrC	H1 (Condensation pipe height 150 dgrC)	H (Meter height) 250dgrC	H1 (Condensation pipe height 250 dgrC)	H (Meter height) 350dgrC	H1 (Condensation pipe height 350 dgrC)
294	183	335	234	475	374
294	183	335	234	475	374
293	186	334	237	474	377
300.5	193.5	341.5	244.5	481.5	384.5
302.5	195.5	343.5	246.5	483.5	386.5
307	200	348	251	488	391
314	207	355	258	495	398
326	219	367	270	507	410
336	234	377	285	517	425
345	248	386	299	526	439
360	278	541	469	541	469
385	328	566	519	566	519
412.7	380.7	593.7	571.7	593.7	571.7
445.4	438.4	626.4	629.4	626.4	629.4

Dimension of DIN PN40 flanged version

Size	K (Flange O/D)	L (Pipe length)	W (Flange screwhole distance)	C (flange thickness)	m (screwhole diameter)	n (screw qty)	L1 (Condensation pipe length)
15	90	180	60.3	11.6	15.9	4	73.5
20	100	180	69.9	13.2	15.9	4	66
25	110	180	79.4	14.7	15.9	4	63.5
32	117.3	180	88.9	16.3	15.9	4	68
40	127	180	98.4	17.9	15.9	4	67.5
50	152.4	180	120.7	19.5	19	4	61
65	180	200	139.7	22.7	19	4	48.5
80	190.5	200	152.4	24.3	19	4	46
100	230	200	190.5	24.3	19	8	40
125	255	220	215.9	24.3	22.2	8	41
150	280	220	241.3	25.9	22.2	8	36
200	345	220	298.5	29	22.2	8	53.5
250	406.4	250	362	30.6	25.4	12	48
300	485	300	431.8	32.2	25.4	12	39.5

H (Meter height) 150dgrC	H1 (Condensation pipe height 150 dgrC)	H (Meter height) 250dgrC	H1 (Condensation pipe height 250 dgrC)	H (Meter height) 350dgrC	H1 (Condensation pipe height 350 dgrC)
294	183	335	234	475	374
294	183	335	234	475	374
293	186	334	237	474	377
300.5	193.5	341.5	244.5	481.5	384.5
302.5	195.5	343.5	246.5	483.5	386.5
307	200	348	251	488	391
314	207	355	258	495	398
326	219	367	270	507	410
336	234	377	285	517	425

345	248	386	299	526	439
360	278	541	469	541	469
385	328	566	519	566	519
412.7	380.7	593.7	571.7	593.7	571.7
445.4	438.4	626.4	629.4	626.4	629.4

Dimension of ANSI CL150 flanged version

Size	K (Flange O/D)	L (Pipe length)	W (Flange screwhole distance)	C (flange thickness)	m (screwhole diameter)	n (screw qty)	L1 (Condensation pipe length)
15	95.2	180	66.7	14.7	15.9	4	71
20	117.5	180	82.6	16.3	19	4	57.2
25	125	180	88.9	17.9	19	4	51
32	135	180	98.4	19.5	19	4	59
40	156	180	114.3	21.1	22.2	4	53
50	165.1	180	127	22.7	19	8	54.7
65	191	200	149.2	25.9	22.2	8	43
80	210	200	168.3	29	22.2	8	36.3
100	255	200	200	32.2	22.2	8	28.5
125	280	220	235	35.4	22.2	8	28.5
150	320	220	269.9	37	22.2	12	16
200	381	222	330.2	41.7	25.4	12	35.5
250	445	250	387.3	48.1	28.6	16	28.7
300	521	300	450.8	51.3	31.7	16	21.5

H (Meter height) 150dgrC	H1 (Condensation pipe height 150 dgrC)	H (Meter height) 250dgrC	H1 (Condensation pipe height 250 dgrC)	H (Meter height) 350dgrC	H1 (Condensation pipe height 350 dgrC)
294	183	335	234	475	374
294	183	335	234	475	374
293	186	334	237	474	377
300.5	193.5	341.5	244.5	481.5	384.5
302.5	195.5	343.5	246.5	483.5	386.5
307	200	348	251	488	391
314	207	355	258	495	398
326	219	367	270	507	410
336	234	377	285	517	425
345	248	386	299	526	439
360	278	541	469	541	469
385	328	566	519	566	519
412.7	380.7	593.7	571.7	593.7	571.7
445.4	438.4	626.4	629.4	626.4	629.4

Dimension of ANSI CL300 flanged version

Size	K (Flange O/D)	L (Pipe length)	W (Flange screwhole distance)	C (flange thickness)	m (screwhole diameter)	n (screw qty)	L1 (Condensation pipe length)
15	95	180	70	12	15	4	76
20	100	180	75	14	15	4	66

25	125	180	90	14	19	4	61
32	135	180	100	16	19	4	54.5
40	140	180	105	16	19	4	56
50	155	180	120	16	19	4	56
65	175	200	140	18	19	4	56
80	185	200	150	18	19	8	42.5
100	210	200	175	18	19	8	55
125	250	220	210	20	23	8	43.5
150	280	220	240	22	23	8	41
200	330	220	290	22	23	12	61
250	400	250	355	24	25	12	51
300	445	300	400	24	25	16	53.5

H (Meter height) 150dgrC	H1 (Condensation pipe height 150 dgrC)	H (Meter height) 250dgrC	H1 (Condensation pipe height 250 dgrC)	H (Meter height) 350dgrC	H1 (Condensation pipe height 350 dgrC)
294	183	335	234	475	374
294	183	335	234	475	374
293	186	334	237	474	377
300.5	193.5	341.5	244.5	481.5	384.5
302.5	195.5	343.5	246.5	483.5	386.5
307	200	348	251	488	391
314	207	355	258	495	398
326	219	367	270	507	410
336	234	377	285	517	425
345	248	386	299	526	439
360	278	541	469	541	469
385	328	566	519	566	519
412.7	380.7	593.7	571.7	593.7	571.7
445.4	438.4	626.4	629.4	626.4	629.4

Dimension of JIS 10K flanged version

Size	K (Flange O/D)	L (Pipe length)	W (Flange screwhole distance)	C (flange thickness)	m (screwhole diameter)	n (screw qty)	L1 (Condensation pipe length)
15	95	180	70	14	15	4	76
20	100	180	75	16	15	4	66
25	125	180	90	16	19	4	61
32	135	180	100	18	19	4	54.5
40	140	180	105	18	19	4	56
50	155	180	120	18	19	8	56
65	175	200	140	20	19	8	56
80	200	200	160	22	23	8	35
100	225	200	185	24	23	8	47.5
125	270	220	225	26	25	8	33.5
150	305	220	260	28	25	12	28.5
200	350	220	305	30	25	12	51
250	430	250	380	34	27	12	36
300	480	300	430	36	27	16	36

H (Meter height) 150dgrC	H1 (Condensation pipe height 150 dgrC)	H (Meter height) 250dgrC	H1 (Condensation pipe height 250 dgrC)	H (Meter height) 350dgrC	H1 (Condensation pipe height 350 dgrC)
294	183	335	234	475	374
294	183	335	234	475	374
293	186	334	237	474	377
300.5	193.5	341.5	244.5	481.5	384.5
302.5	195.5	343.5	246.5	483.5	386.5
307	200	348	251	488	391
314	207	355	258	495	398
326	219	367	270	507	410
336	234	377	285	517	425
345	248	386	299	526	439
360	278	541	469	541	469
385	328	566	519	566	519
412.7	380.7	593.7	571.7	593.7	571.7
445.4	438.4	626.4	629.4	626.4	629.4

Dimension of JIS 20K flanged version

Size and dimension for insertion type

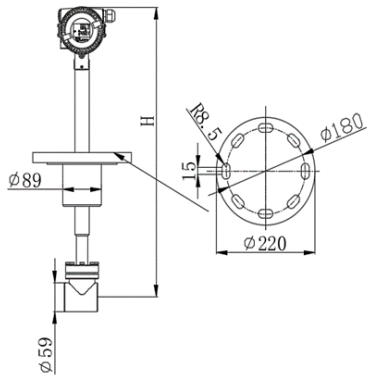

Size	H (High)
300	580
350	605
400	630
500	680
600	730
700	780
800	830
900	880
1000	930

Size and dimension for remote converter

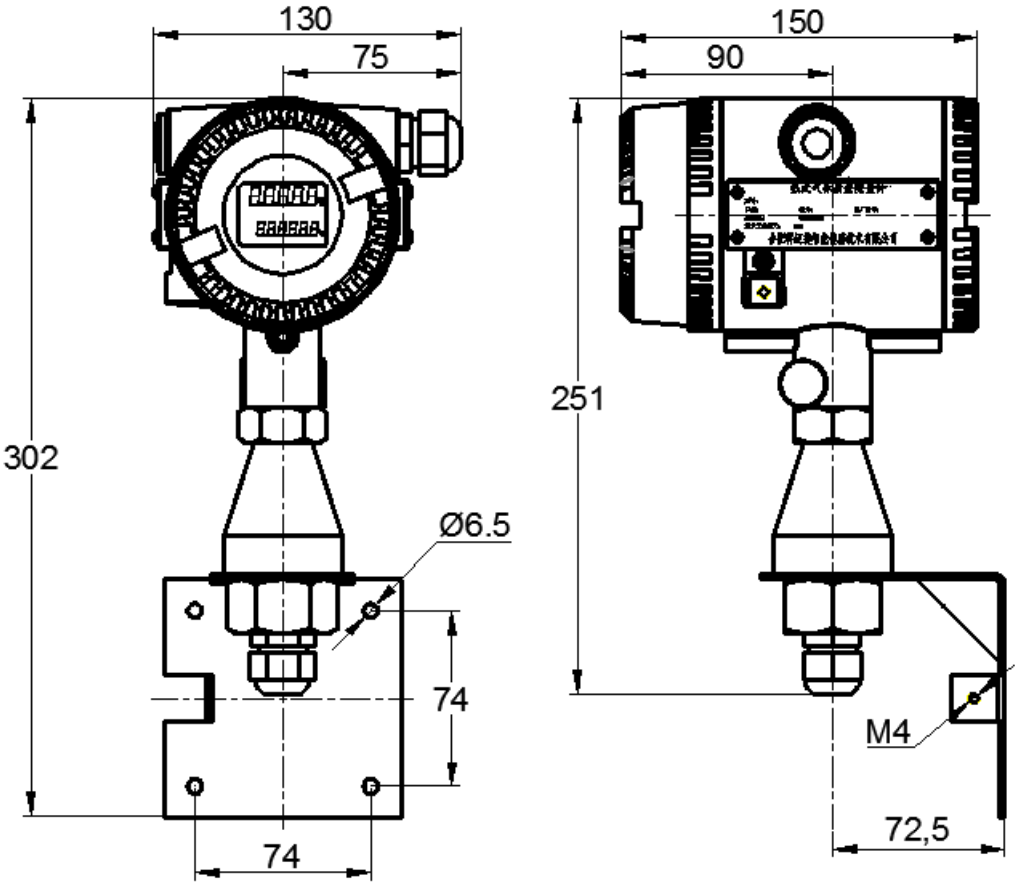

14. Support Contact

Manufacturer

Daviteq Technologies Inc
No.11 Street 2G, Nam Hung Vuong Res., An Lac Ward, Binh Tan Dist., Ho Chi Minh City, Vietnam.
Tel: +84-28-6268.2523/4 (ext.122)
Email: info@daviteq.com | www.daviteq.com

Distributor in **Australia** and **New Zealand**

Templogger Pty Ltd
Tel: 1800 LOGGER
Email: contact@templogger.net

Revision #7
Created Thu, May 20, 2021 1:45 AM by Kiệt Anh Nguyễn
Updated Sun, Dec 11, 2022 8:01 PM by Vũ Hoàng Anh Tài